Roadranger®

Eaton® Fuller® Heavy Duty Transmissions

One Great Drivetrain from Two Great Companies

Illustrated Parts List RTO-11109B-ATS Jun 2005

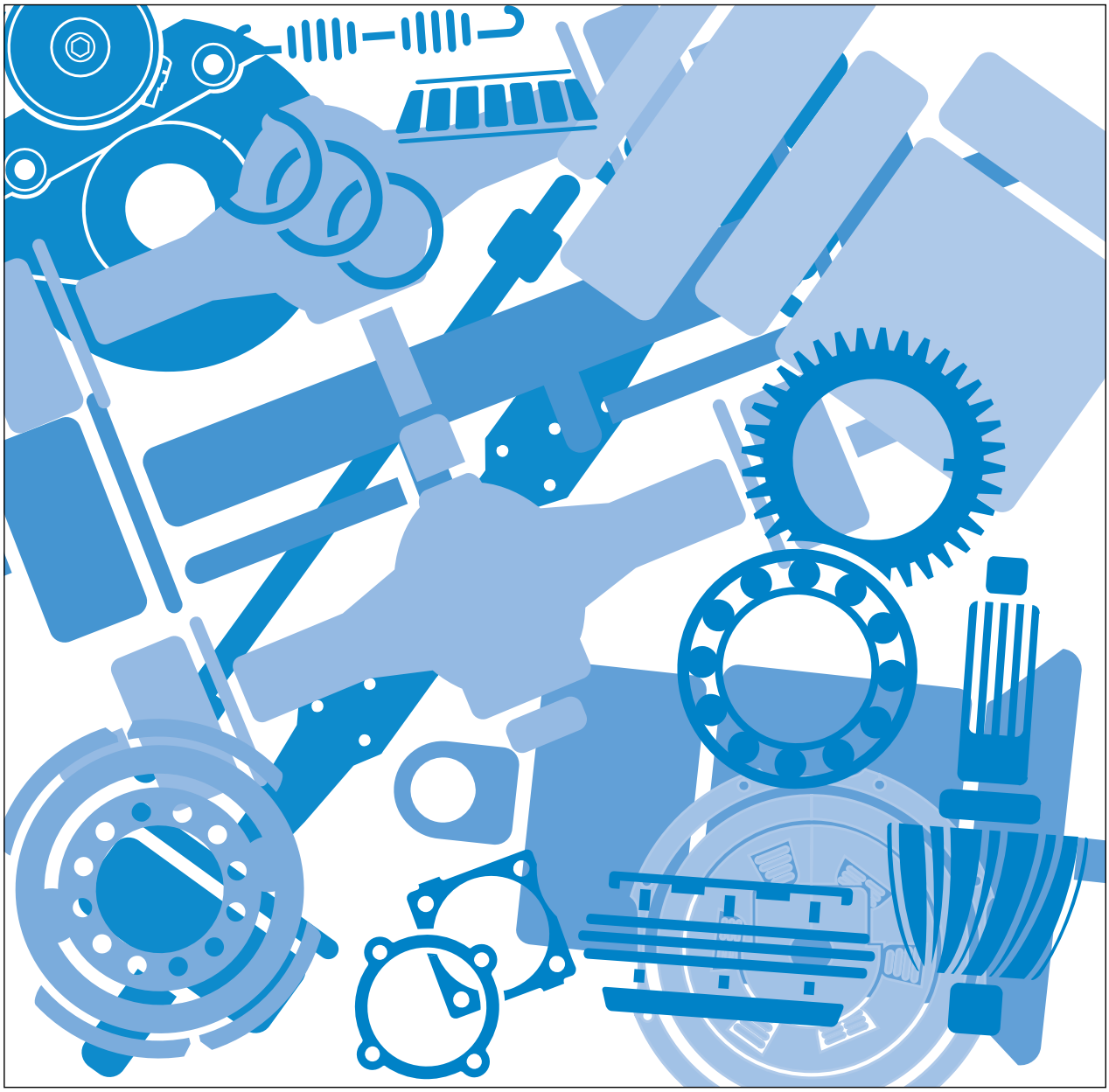

For the most current information, visit the Roadranger web site at www.roadranger.com

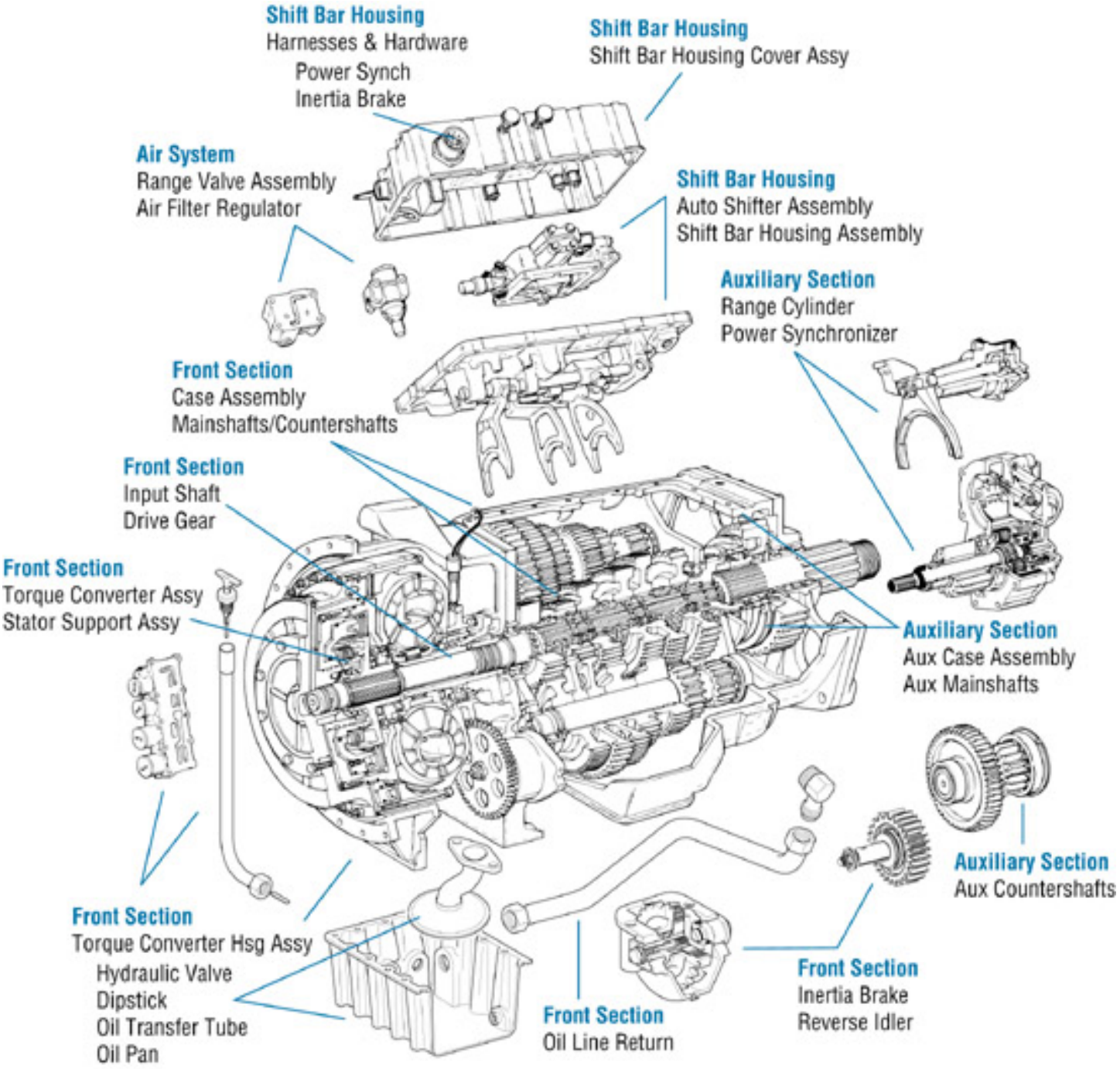
Shift Bar Housing
Harnesses & Hardware
Power Synch
Inertia Brake
Shift Bar Housing
Shift Bar Housing Cover Assy
Air System
Range Valve Assembly
Air Filter Regulator
Shift Bar Housing
Auto Shifter Assembly
Shift Bar Housing Assembly
Auxiliary Section
Range Cylinder
Power Synchronizer
Front Section
Case Assembly
Mainshafts/Countershafts
Front Section
Input Shaft
Drive Gear
Front Section
Torque Converter Assy
Stator Support Assy
Auxiliary Section
Aux Case Assembly
Aux Mainshafts
Auxiliary Section
Aux Countershafts
Front Section
Torque Converter Hsg Assy
Hydraulic Valve
Dipstick
Oil Transfer Tube
Oil Pan
Front Section
Oil Line Return
Front Section
Inertia Brake
Reverse Idler

20001-12-93

Contents

How To Use The Illustrated Parts List **4**
Locating Transmission Tag and Identifying Model Designation **5**
Using Model Designation or Nomenclature **5**
AUXILIARY DRIVE GEAR **6**
BAR HOUSING ASSY **7**
CASE (AUX) **9**
CASE (FRONT) **11**
CONVERTER HOUSING ASSY **13**
COUNTERSHAFT & BRGS(AUX) **15**
COUNTERSHAFT ASSY **16**
ECU CONTROLS **17**
AUTO SHIFTER ASSY 17
ECU CONTROLS **18**
BAR HOUSING COVER ASSY 18
FILTER REGULATOR **19**
FRONT SECTION MISC. **20**
OIL LINES-POWER SYNCHRO 20
HARNESSES & HARDWARE **21**
HARNESS ASSY-TORQUE CONV 21
HARNESSES & HARDWARE **22**
HARNESS ASY-AUTO SHIFTER 22
INPUT SHAFT & DRIVE GEAR **23**
KITS & ASSEMBLIES **24**
MAINSHAFT & SYNCHRO(AUX) **26**
MAINSHAFT ASSY **27**
MISCELLANEOUS **29**
OIL PANS & OIL LINES **30**
OIL PAN-LOW PROFILE 30
OIL PANS & OIL LINES **32**
OIL PAN-LOW PROFILE/RT 32
OIL PANS & OIL LINES **34**
OIL PAN-OFFSET 34
OIL PANS & OIL LINES **36**
OIL PAN-STANDARD 36
POWER SYNCHRONIZER **38**
RANGE CYLINDER **39**
REVERSE IDLER **40**
STATOR SUPPORT ASSY **41**
TORQUE CONVERTER ASSY **42**
VALVES **43**
AIR SYS-POWER SYNCHRO 43
VALVES **44**
AIR SYS-RANGE 44
Appendix **45**

How To Use The Illustrated Parts List

Using Model Designation or Nomenclature

- This information provides a guideline to assist you in indentifying the transmission designation assigned to a transmission model - information vital to identifying and ordering parts.

Kits and Assemblies (K/A's)

- Kits and Assemblies contain groups of individual or assembled parts developed for optimal replacement or repair of a service problem.
- Kits and Assemblies are shown with applicable parts groupings in the parts listings.

Identifying Kits and Assemblies

A- Part numbers beginning with the letter 'A' are pre-assembled Production Assemblies
K- Part numbers beginning with the letter 'K' are kits that are not assembled
S- Part numbers beginning with the letter 'S' are pre-assembled Service Assemblies

- Note: Some Production Assemblies do not begin with a letter prefix (Midrange only).

Illustrations

- Illustrations show parts in assembly groups.
- Item numbers on illustrations correspond with parts listings on pages adjacent to the illustration.
- Notes are included on illustrations where additional information is needed.

Parts Listing

Parts listings are defined by parts groupings and are broken down by service assemblies. Parts listings identify a part for servicing with the following categories

- **Item Number** - corresponding with numbers on illlustrations for part identification.
- **Current Part** - indentifies part as it is available for service.
- **Description** - specifies part name or description.
- **Replaced Part** - quantity quantity required for assembly.
- **Quantity** - defines unique characteristics or requirements.
- **Notes** - indicates Kits or Assemblies that contain a particular part.
- **Kits/Assy's Where Used**

Locating Transmission Tag and Identifying Model Designation

Transmission model designation, and other transmission information, are stamped on the transmission tag. To identify the transmission model designation (nomenclature), locate the tag on the transmission and then locate the model designation number as shown.

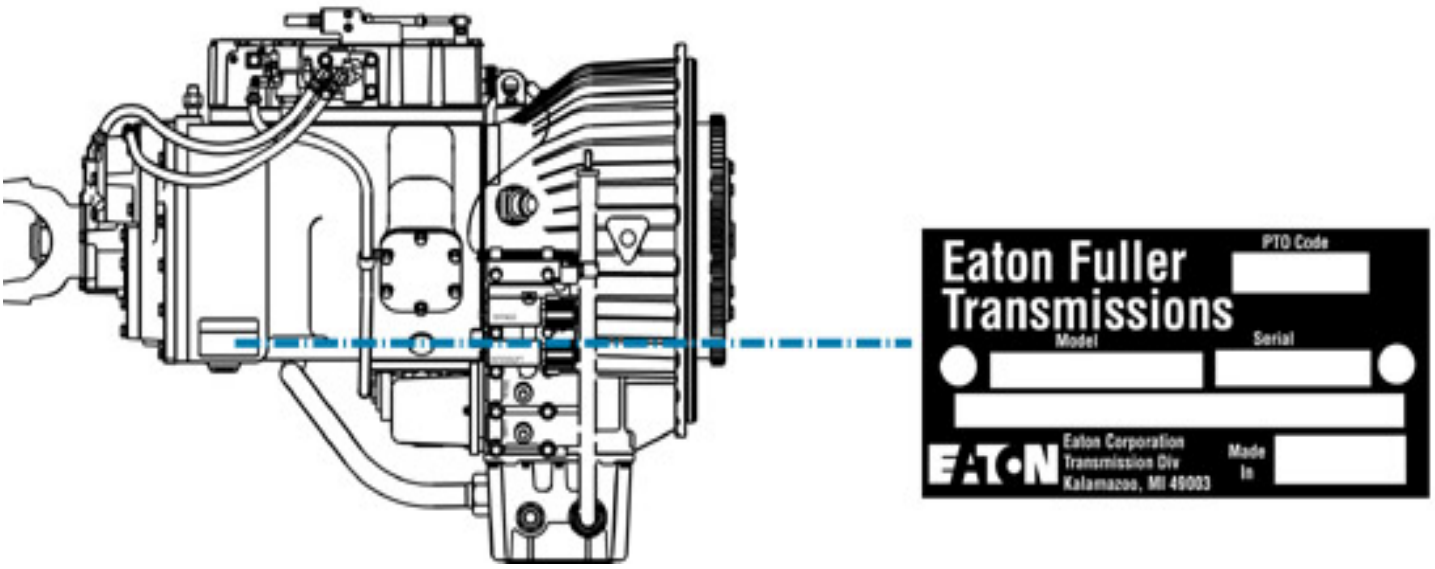

Using Model Designation or Nomenclature

The model designation or nomenclature assigned to a transmission model provides information concerning transmission torque capacity, forward speeds, ratio set, shift bar housing and other provisions and options. Use the following guidelines to identify your transmission model designation. This information is useful when ordering parts.

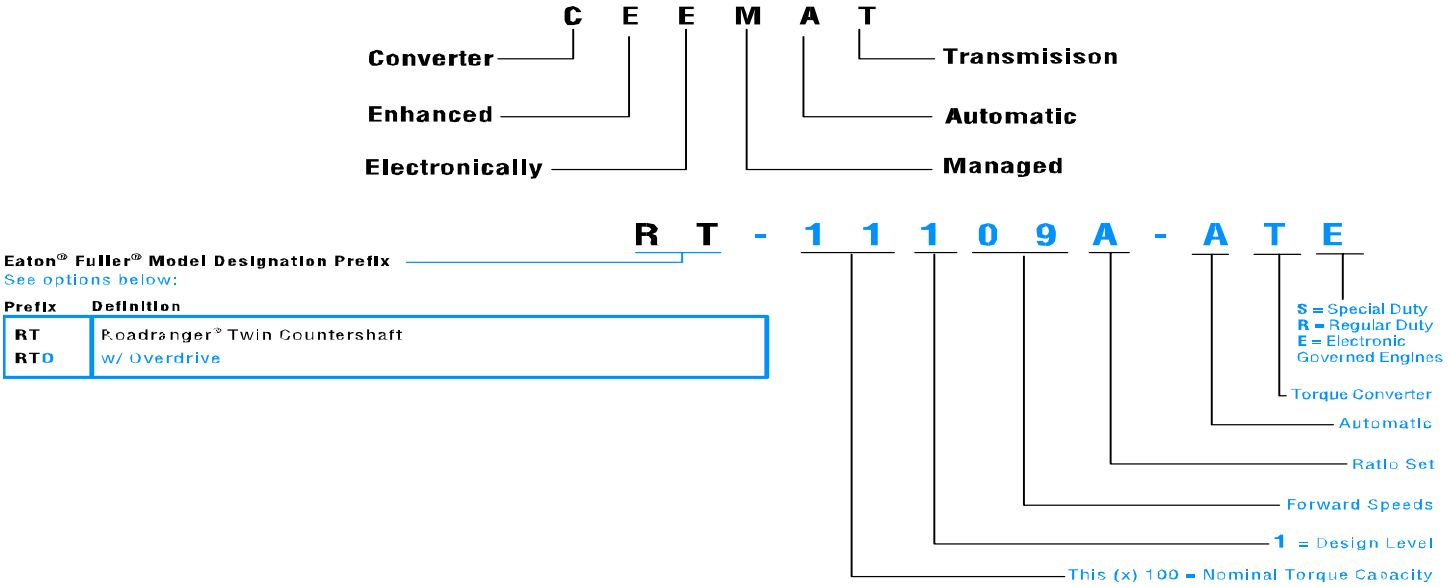

Every effort has been made to ensure the accuracy of this publication. However, Eaton Corporation makes no expressed or implied warranty or representation based on the information contained in this publication. Any errors or omissions may be reported to Eaton Roadranger Parts Marketing, Eaton Corporation, P.O. Box 4013, Kalamazoo, MI 49003.

Copyright Eaton Corporation, 2005 All rights reserved.

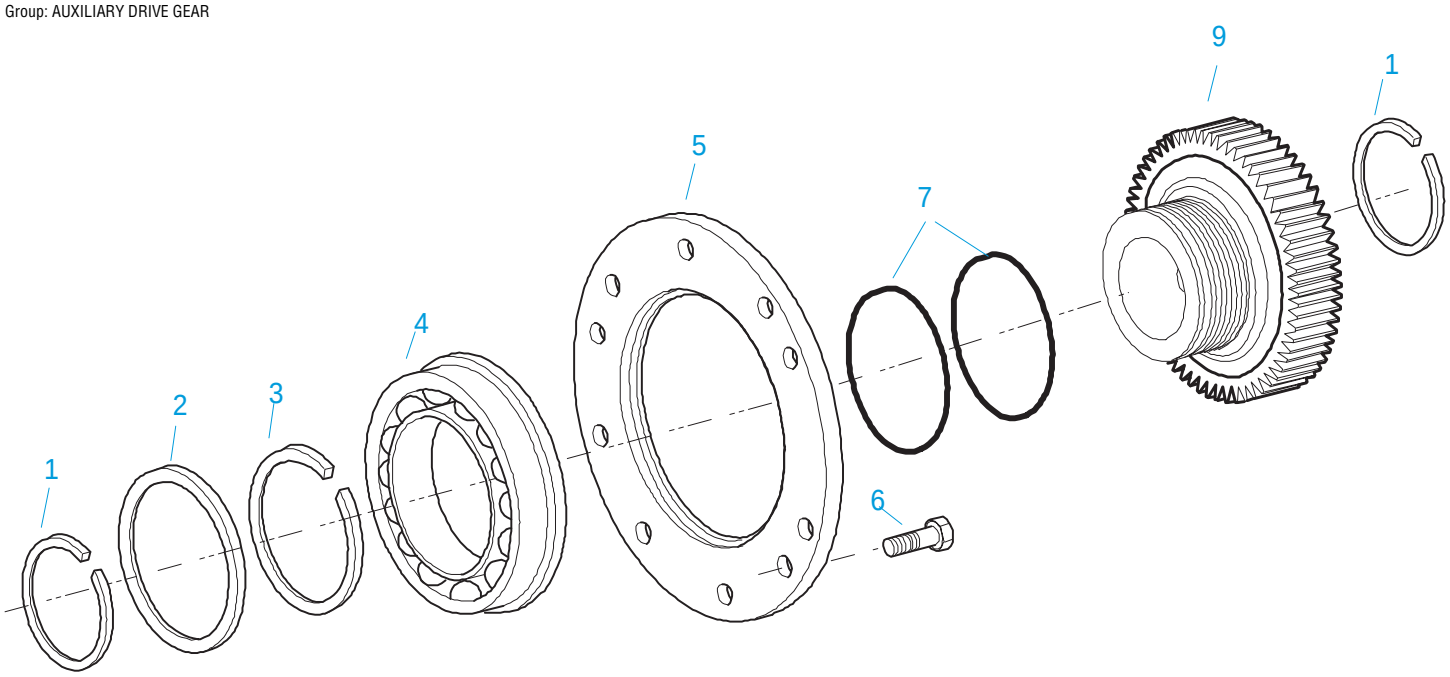

10482-12/92 Aux DG

AUXILIARY DRIVE GEAR

Item	Current Part	Description	Replaced Part	Qty.	Notes	Kits/Assys Where Needed
1	16763	SNAP RING		2		K-2830 ,K-2902 ,K-2903 ,K-2904 ,K-2905
2	21320	SNAP RING RETAINER		1	RTO ONLY	K-2830
3	16628	SNAP RING		1		K-2830
4	5566507	BEARING	5566504	1		K-2902 ,K-2903 ,K-2904 ,K-2905
5	16138	BEARING RETAINER		1		
6	X-8-645	CAPSCREW		6	3/8"-16X1"	
7	17453	-O- RING		2		K-2426 ,K-2630 ,K-2902 ,K-2903 ,K-2904 ,K-2905
9	K-2630	REPL KIT-DRIVE GEAR	4300548	1		

Group: BAR HOUSING ASSY

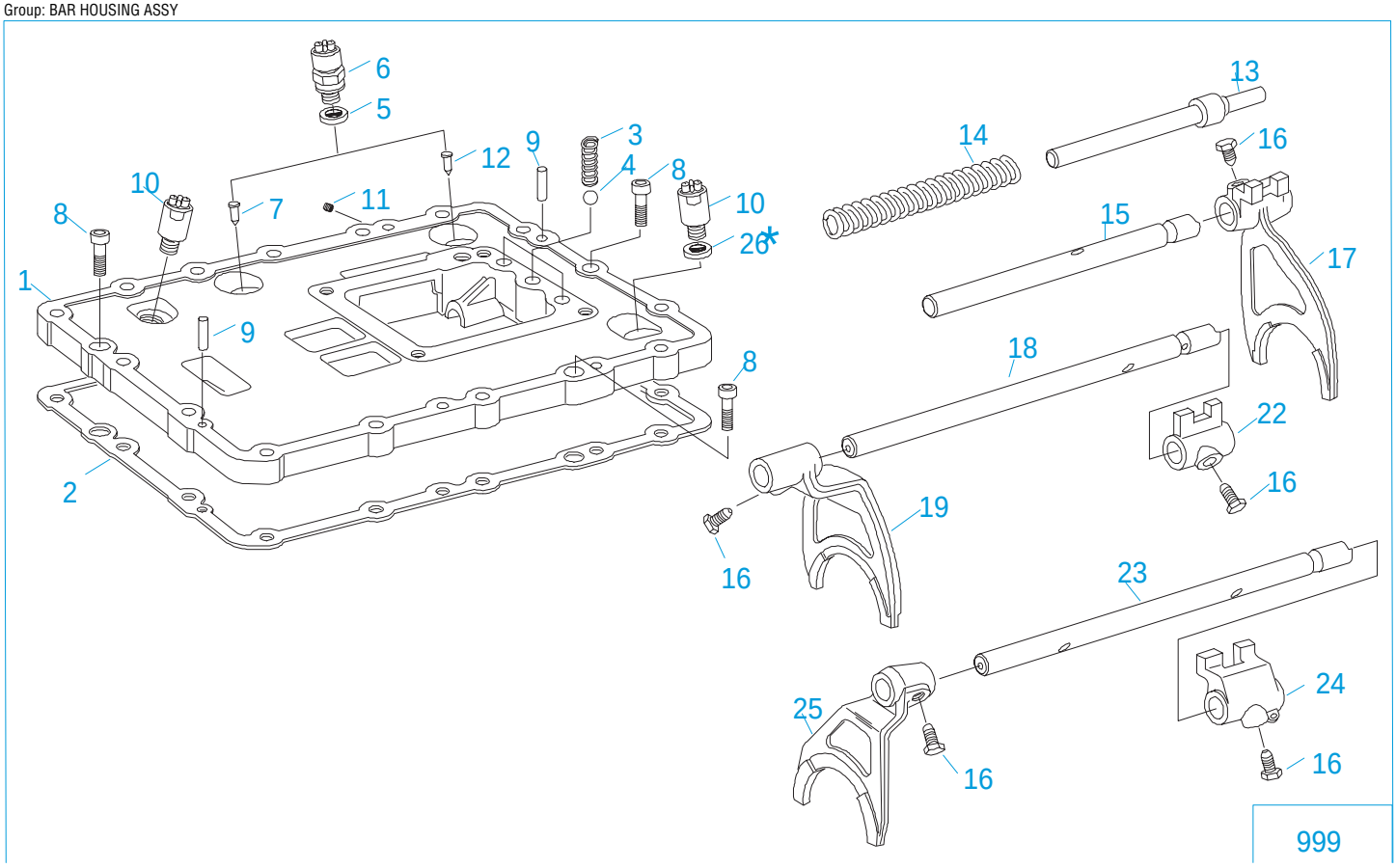

20231-11-93

*Spacer not applicable to all models - refer to parts listing.

BAR HOUSING ASSY

Item	Current Part	Description	Replaced Part	Qty.	Notes	Kits/Assys Where Needed
1	K-2754	SHIFT BAR HSG ASSY	22596	1	HOUSING ONLY	
2	4302676	GASKET	14918	1		K-2172 ,K-2754 ,S-1876
3	1069	SPRING		3		K-2830 ,K-2903 ,K-2905 ,S-1876
4	X-14-800	STEEL BALL		3	1/2"	A-5732 ,K-2830 ,S-1876
5	15900	GASKET		2		K-2633 ,S-1876
6	691744	SHIFT SENSOR SWITCH	22565	2		K-2633 ,S-1876
7	691316	ACTUATING SWITCH PIN	23112	1		S-1876
8	X-8-691	CAPSCREW		3	3/8"-16X1"	
9	62516	ROLL PIN	62521	2		S-1876
10	K-2980	SENSOR UPDATE KIT	22567 ,K - 2631	2		
11	X-12-102	PLUG		1		S-1876
12	K-3271	NEUTRAL SWITCH KIT	22603	1		
13	691314	ACTUATING SHAFT SWITCH	22601	1		K-3271 ,S-1876
14	22604	SPRING		1		S-1876
15	22600	YOKE BAR		1	LOW/REVERSE	S-1876
16	3220	LOCKSCREW		5		S-1876
17	22434	YOKE		1	LOW/REVERSE	S-1876
18	22593	YOKE BAR		1	1ST/2ND	S-1876
19	691600	SHIFT YOKE	4302994	1	1ST/2ND	S-1876
22	14658	SHIFT BLOCK		1	1ST/2ND	S-1876
23	22594	YOKE BAR		1	3RD/4TH	S-1876
24	4303273	SHIFT BLOCK	22602	1	3RD/4TH	S-1876
25	691601	SHIFT YOKE	4302212	1	3RD/4TH	S-1876
26	23166	SPACER		1	USE FOR RTO,B-RATIO,ATE MODELS ONLY	K-2980
999	S-1876	SHIFT BAR HSG ASSY	22596	1	COMPLETE	

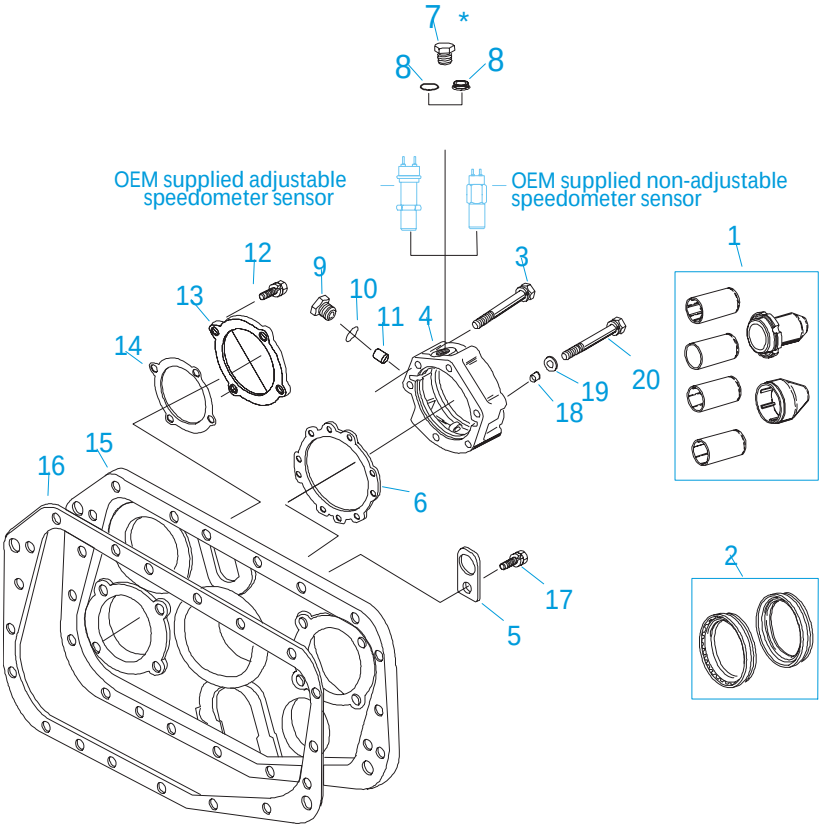

* Note Items 7 & 8 / Magnetic Speedometer Openings:
Use 13679 "O" ring w/ OEM supplied adjustable speedometer sensor
and 20225 "O" ring w/ OEM supplied non-adjustable speedometer sensor or Eaton part #20224 Plug

20500-11-93

CASE (AUX)

Item	Current Part	Description	Replaced Part	Qty.	Notes	Kits/Assys Where Needed
1	K-3651	OIL SEAL TOOL KIT		1		
2	K-2262	OIL SEAL W/SLINGER	19109 20807 20808	1		K-2289 ,K-2290 ,K-2775 ,K-2776 ,K-2777 ,K-2778
3	X-8L-611	CAPSCREW		5	3/8"-16X3-1/4"	
4	S-2113	REAR BRG COVER ASSY	4302027	1		
5	23646	LIFTING EYE		1		
6	15532	GASKET		1		K-2172 ,K-2262 ,S-2113 ,S-2119 ,S-2178
7	20224	PLUG-MAGNETIC		2		S-2113 ,S-2119 ,S-2178 ,S-2181 ,S-2183 S-2185 ,S-2187 ,S-2189
8	20225	-O- RING		2	USE W/20224 PLUG OR OEM SUPPLIED NON-ADJUSTABLE SPEEDOMETER SENSOR NOT TO BE USED WITH 4301954 SEAL	
8	4301954	SEAL		2	O-RING NOT REQUIRED	S-2113 ,S-2119 ,S-2178
9	20226	PLUG-MECHANICAL	2237	1		S-2113 ,S-2119 ,S-2178 ,S-2181 ,S-2183 S-2187 ,S-2189
10	14142	-O- RING		1		S-2113 ,S-2119 ,S-2178 ,S-2181 ,S-2183 S-2187 ,S-2189
11	7992	BUSHING		1		S-2113 ,S-2119 ,S-2178
12	X-8L-602	CAPSCREW		4	3/8"-16X1-1/2"	
13	22419	REAR BEARING COVER		1		
14	22420	GASKET		1		K-2172

Item	Current Part	Description	Replaced Part	Qty.	Notes	Kits/Assys Where Needed
15	23392	REAR HOUSING		1		
16	14335	GASKET		1		K-2172 ,S-2181 ,S-2183 ,S-2185 ,S-2187 S-2189
17	X-8L-614	CAPSCREW		1	3/8"-16X2"	
17	X-8-698	CAPSCREW		2	3/8"-16X2-1/2"	
17	X-8L-605	CAPSCREW		1	3/8"-16X3"	
17	X-8L-602	CAPSCREW		14	3/8"-16X1-1/2"	
18	19709	COLLAR		1		K-2172 ,K-2262 ,S-2113 ,S-2119 ,S-2178
19	17106	GASKET		1		K-2172 ,K-2262 ,S-2113 ,S-2119 ,S-2178
20	X-8-611	CAPSCREW		1	3/8"-16X3-1/4"	

Group: CASE (FRONT)

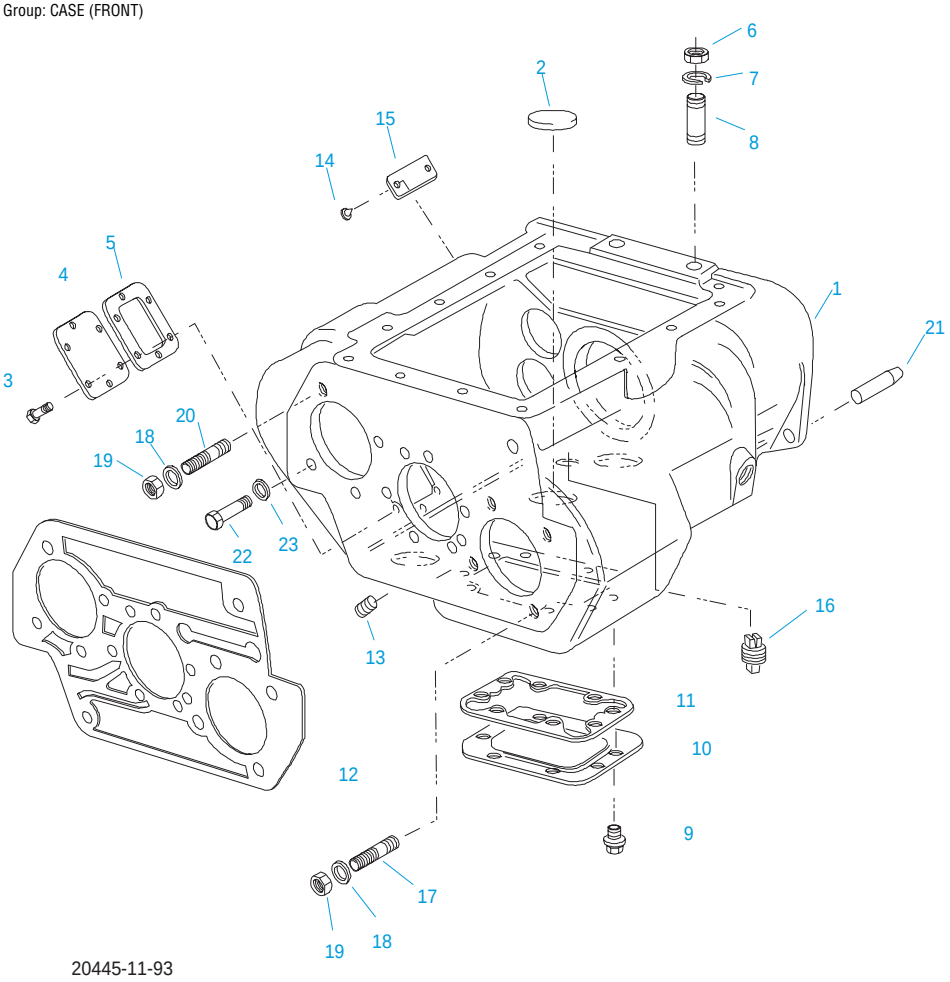

CASE (FRONT)

Item	Current Part	Description	Replaced Part	Qty.	Notes	Kits/Assys Where Needed
1	S-1785	CASE ASSY	23583	1		
2	14373	MAGNET		3		S-1785
3	X-8-686	CAPSCREW		6	3/8"-16X3/4"	
4	14575	PTO COVER	4302254	1		
5	4305309	GASKET	1684	1		K-2172 ,K-2388 ,K-2906
6	X-1-1005	NUT	X 1 1000	2	5/8"-18	K-2504 ,K-2625
7	X-10-1005	WASHER	X 3 1000 ,X10 1000 ,X10 1004	2	1.23 X 6.60	
8	14554	STUD	1632 ,6579	2	5/8" X 2-3/16"	
9	X-8-725	CAPSCREW		8	7/16"-14X7/8" NOT USED ON ATE MODELS	
10	4302809	PTO COVER	16596 ,4300571	1	NOT USED ON ATE MODELS	
11	4305310	GASKET	4302810	1		K-2172
12	22507	GASKET		1		K-2172 ,K-2388 ,K-2504 ,K-2625
13	X-12-802	PIPE PLUG		1	1/2"	K-3226
16	X-12-1207	PIPE PLUG	X12 1202 ,X12 1206	1	3/4" MAGNETIC	
16	4304023	PLUG	4303747	1	1-1/16" MAGNETIC, O-RING INCLUDED	S-1785
17	4302708	STUD	5966	4		
18	X-10-1005	WASHER	X 3 1000 ,X10 1000 ,X10 1004	6	1.23 X 6.60	
19	X-1-1005	NUT	X 1 1000	6	5/8"-18	K-2504 ,K-2625
20	22916	STUD		2		
21	14334	DOWEL		2		
22	X-8-808	CAPSCREW		4	1/2"-13X1-1/4"	
23	X-10-802	NO LONGER AVAILABLE		4	1/2" PLAIN	
24	X-12-2007	PIPE PLUG	X12 2006	1		

Item	Current Part	Description	Replaced Part	Qty.	Notes	Kits/Assys Where Needed
24	4304023	PLUG	4303747	1	1-1/16" MAGNETIC, O-RING INCLUDED	S-1785

Group: CONVERTER HOUSING ASSY

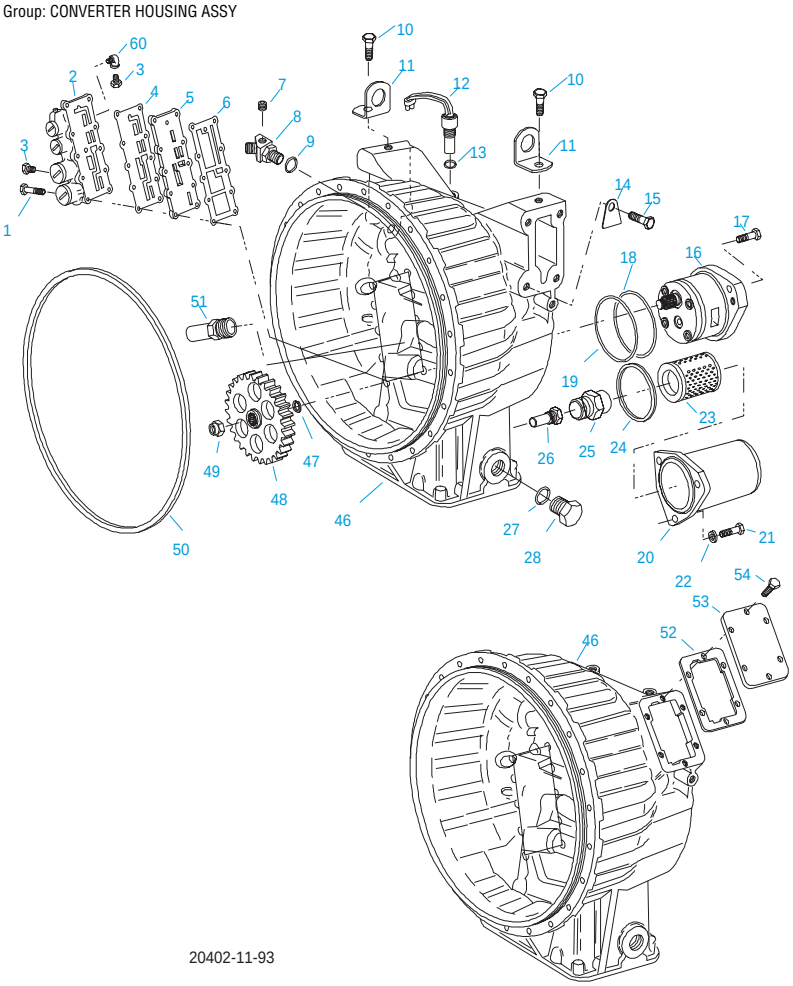

CONVERTER HOUSING ASSY

Item	Current Part	Description	Replaced Part	Qty.	Notes	Kits/Assys Where Needed
1	X-8-6104	CAPSCREW		2	3/8"-16X2-3/4"	
1	X-8L-681	CAPSCREW		2	3/8"-16X2-3/4"	
1	X-8L-672	CAPSCREW		6	3/8"-16X3-1/4"	
2	A-5587	VALVE ASSY		1		
3	X-12-210	PIPE PLUG		4	1/8"	
4	22532	GASKET		1		K-2172 ,K-2387R ,K-2388 ,K-2625
5	23612	PLATE		1		
6	22534	GASKET		1		K-2172 ,K-2387R ,K-2388 ,K-2625
7	X-12-802	PIPE PLUG	X12 800	1	1/2"	K-3226
8	K-3226	ELBOW KIT	4300307	1		
9	23109	-O- RING		1		K-2388 ,K-2625 ,K-2877 ,K-2914 ,K-2915
10	X-8L-601	CAPSCREW		2	3/8"-16X3/4"	
11	23645	LIFTING EYE		2	90 DEG.	
12	K-2632	ENG SPEED SENSOR KIT	22569	1		
13	22504	-O- RING		1		K-2388 ,K-2625 ,K-2632
14	23573	INSTRUCTION TAG		3		
15	X-8-1202	SCREW		3	3/4"-10X1"	
16	K-2911	OIL PUMP KIT	4300747 ,4302714	1		
17	X-8C-604	CAPSCREW		2	3/8"-16X1-1/4"	K-2504 ,K-2911
18	691342	SEAL RING	5568503	1		K-2388 ,K-2504 ,K-2625 ,K-2911
19	22430	-O- RING		1		K-2388 ,K-2504 ,K-2625 ,K-2911
20	23220	FILTER BOWL		1		

Item	Current Part	Description	Replaced Part	Qty.	Notes	Kits/Assys Where Needed
21	X-8-6105	SCREW	X 8 6106	3	3/8"-16X1-1/4"	K-2314
22	X-3-607	CONICAL WASHER		3	3/8"	K-2314
23	22510	OIL FILTER		1		K-2314
24	23108	-O- RING		1		K-2314 ,K-2388 ,K-2625
25	22512	NIPPLE		1		
26	A-5732	RELIEF VALVE ASSY		1		K-2625 ,S-2015
27	23029	-O- RING		1		K-2388 ,K-2625 ,K-2914
28	23028	PLUG		1		K-2914
46	K-2625	#1 CONVERTER HSG KIT		1		
46	K-2388	CONVERTER HOUSING KIT	4300323 ,4300377	1	6 BOLT ACCESS	
47	4302219	SNAP RING		1		K-2911
48	4302216	PUMP GEAR		1		
49	X-1-1008	NUT		1	5/8"-18	K-2504 ,K-2625
50	23487	SEAL RING		1		K-2172 ,K-2388 ,K-2398 ,K-2504 ,K-2990
51	A-7119	FILTER BYPASS VALVE ASSY	A - 6067 A - 6393	1		K-2387R ,K-2625 ,S-2015
52	4305309	GASKET	1684	1		K-2172 ,K-2388 ,K-2906
53	14575	PTO COVER	4302254	1		
54	X-8-686	CAPSCREW		6	3/8"-16X3/4"	
60	12845	ELBOW		2	1/8"	

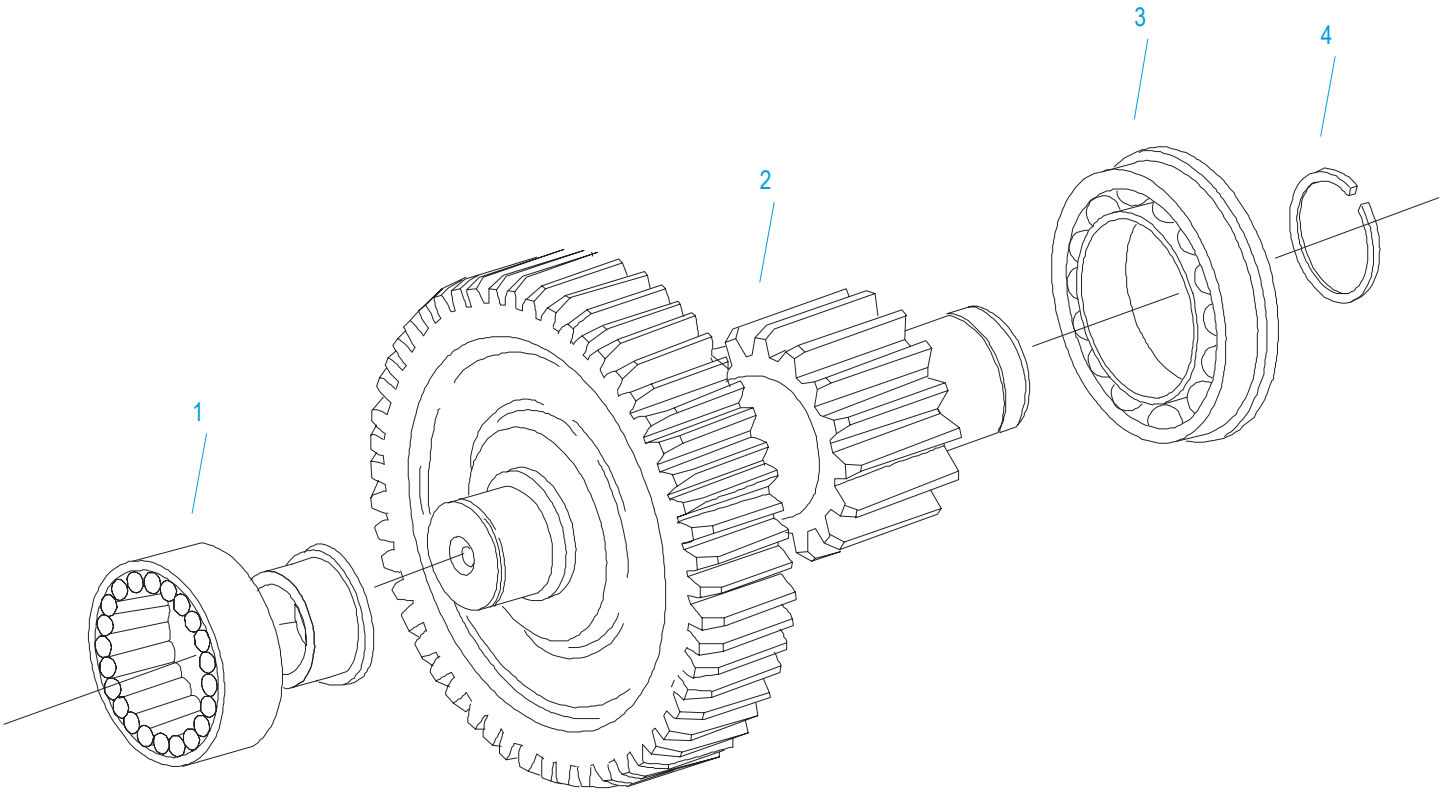

10442-4/92 Aux CS

COUNTERSHAFT & BRGS(AUX)

Item	Current Part	Description	Replaced Part	Qty.	Notes	Kits/Assys Where Needed
1	8879	BEARING		2		K-2289 ,K-2290 ,K-2775 ,K-2776 ,K-2777 ,K-2778 ,S-2181 ,S-2183 ,S-2185 ,S-2187 S-2189
2	A-5557	WELDED COUNTERSHAFT ASSY		2	C/S 23414 - D/G 19276	
3	23613	BEARING		2		K-2775 ,K-2778
4	16723	SNAP RING		2		K-2290 ,K-2775 ,K-2777 ,K-2778 ,K-2829

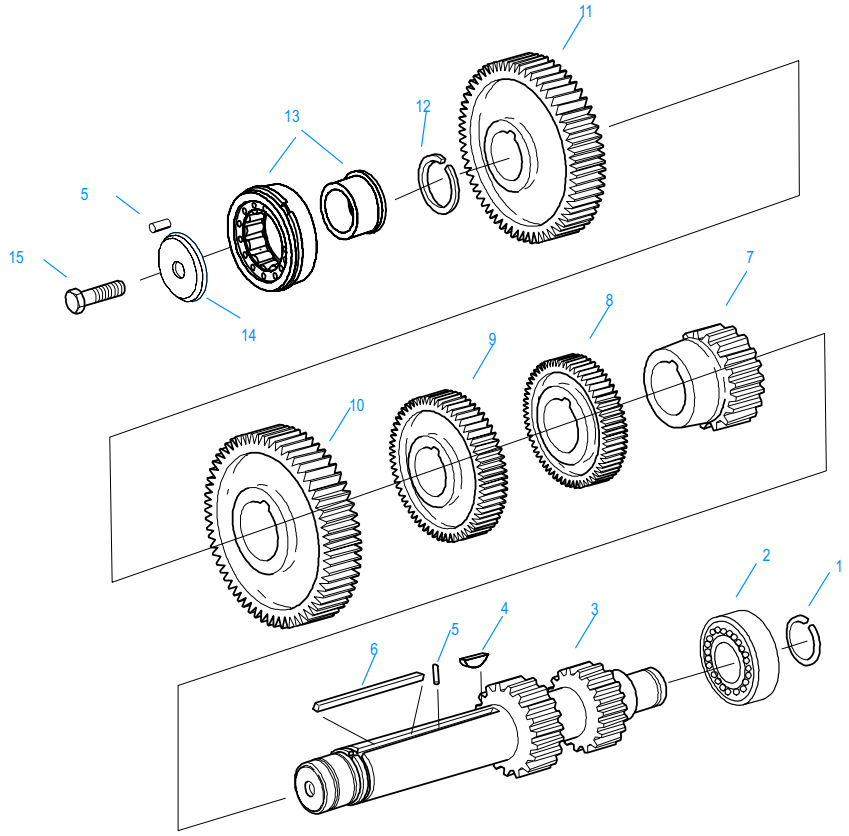

10341-1/92 CS/RT

COUNTERSHAFT ASSY

Item	Current Part	Description	Replaced Part	Qty.	Notes	Kits/Assys Where Needed
1	14317	SNAP RING		2		K-2289 ,K-2290 ,K-2775 ,K-2776 ,K-2777 ,K-2778 ,K-2829 ,K-2830
2	14366	BEARING		2		K-2289 ,K-2290 ,K-2775 ,K-2776 ,K-2777
3	K-2935	CNTRSHFT-LOWER	20804 ,22411	1		
3	K-2934	CNTRSHFT-UPPER	19549	1		
4	X-6-E	KEY		2		
5	62511	ROLL PIN		4		
6	4304840	KEY	19673	2		
7	21025	1ST GEAR-CNTRSHFT	19629	2		
8	21264	2ND GEAR-CNTRSHFT	19623	2		
9	21262	OD GEAR-CNTRSHFT	19639 ,21027	2		
10	15953	PTO GEAR - LOWER		1		
10	20840	PTO GEAR - UPPER		1		
11	4305069	DRIVE GEAR-CNTRSHFT	21018	2		
12	19198	SNAP RING		2		
13	4304599	BEARING	4302677 4304598	2		K-2289 ,K-2290 ,K-2775 ,K-2776 ,K-2777 ,K-2778
14	4304605	RETAINER	19548	2	ROLL PIN NO LONGER REQUIRED	
15	X-7-1005	CAPSCREW		2	5/8"-18X1-3/4"	

Group: ECU CONTROLS
Sub-Group: AUTO SHIFTER ASSY

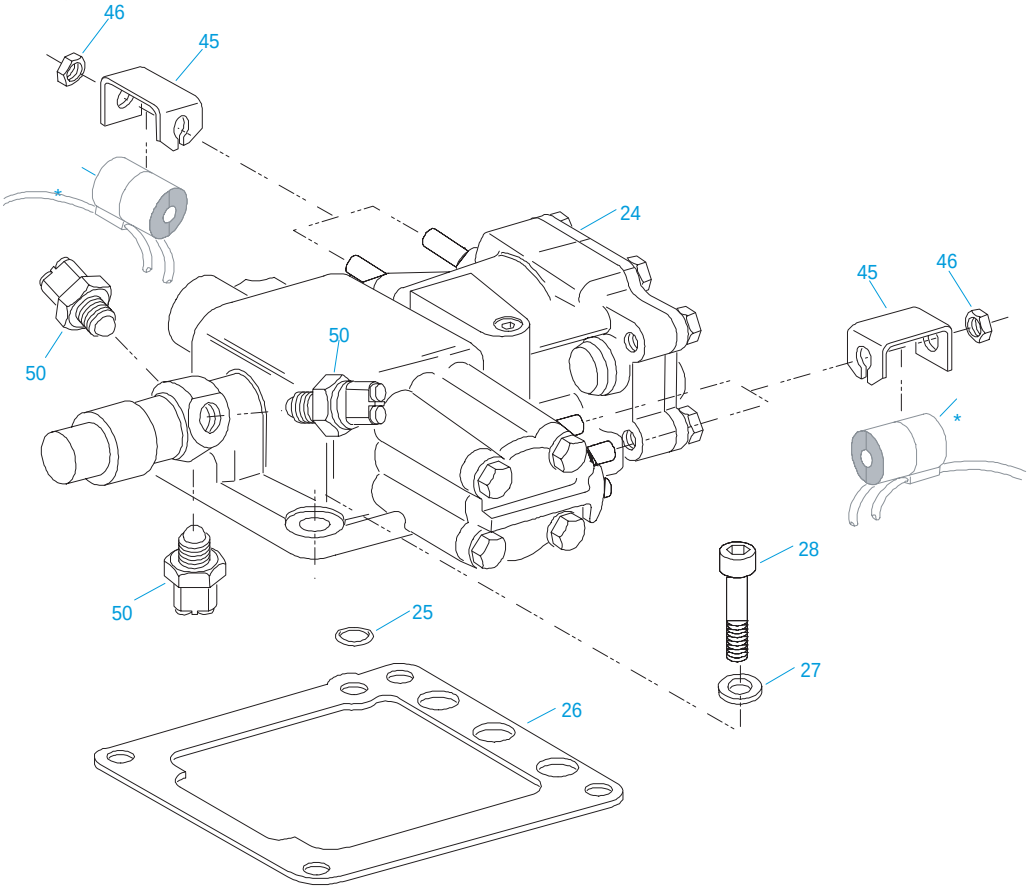

20226-11-93

* Indicates connection for Auto Shifter Harness Assembly

ECU CONTROLS

AUTO SHIFTER ASSY

Item	Current Part	Description	Replaced Part	Qty.	Notes	Kits/Assys Where Needed
24	K-2983	AUTO SHIFTER KIT	A - 5517 ,K - 2635	1		
24	K-2983R	REMAN AUTOSHIFTER KIT	K - 3080	1		
25	14197	-O- RING		1		K-2633 ,K-2983
26	691303	GASKET	22592	1		K-2172 ,K-2385 ,K-2633 ,K-2983 ,S-1876
27	X-10-600	WASHER		4	3/8"	
28	X-8-6101	CAPSCREW		4	3/8"-16X1-1/2"	
45	22867	YOKE		4		
46	X-16-700	NUT		4	7/16"-20	
50	691744	SHIFT SENSOR SWITCH	22565	3		K-2633 ,S-1876

ECU CONTROLS

BAR HOUSING COVER ASSY

Item	Current Part	Description	Replaced Part	Qty.	Notes	Kits/Assys Where Needed
	28.001	CEEMAT ECU P/N CHART		1		
	4301116	GASKET		1		K-2172 ,K-2385 ,K-2633 ,K-2754 ,K-2980 ,K-2981 ,K-2982 ,K-2983 ,S-1876
	7935	BREATHER		1		
	9332	BUSHING		1		
	X-12-405	PIPE PLUG		1		
	X-8-615	CAPSCREW		2	3/8"-16X4-1/4"	
1	X-8-690	CAPSCREW		3	3/8"-16X5"	
2	X-10-605	WASHER		2	3/8"	K-2906 ,K-2980 ,K-2981 ,K-2982 ,K-2983 ,K-2983R ,K-3201
3	X-1-604	NUT		1	3/8"-24	
4	4300049	SHIFT CONTROL LEVER		1	5/6 POSITION	
4	4300074	SHIFT CONTROL LEVER		1	7 POSITION	
5	4300042	SHIFT INDICATOR PLATE		1	5 POSITION	
5	4300044	SHIFT INDICATOR PLATE		1	6 POSITION	
5	4300045	SHIFT INDICATOR PLATE		1	7 POSITION	
6	23473	WASHER		15		K-2385 ,K-2633 ,K-2906 ,K-2980 ,K-2981 ,K-2982 ,K-2983 ,S-1876
7	22544	WASHER		1		
8	X-1-405	NUT	X 9 402	2		K-2757
9	4300054	BRACKET		1	OPTION A - USE X-8-690 CAPSCREWS	
9	4300055	BRACKET		1	OPTION C - USE X-8-690 CAPSCREWS	
9	4300056	BRACKET		1	OPTION B - USE 2 PCS 4300051 AND X-8-6103 CAPSCREWS W/THIS BRACKET	
10	4300053	CLAMP		1		K-2757
11	4300092	-U- BOLT		1		K-2757
12	X-8-6100	CAPSCREW		1	3/8"-16X4-1/8"	
13	X-8-647	CAPSCREW		9	3/8"-16X4-3/4"	

Group: FILTER REGULATOR

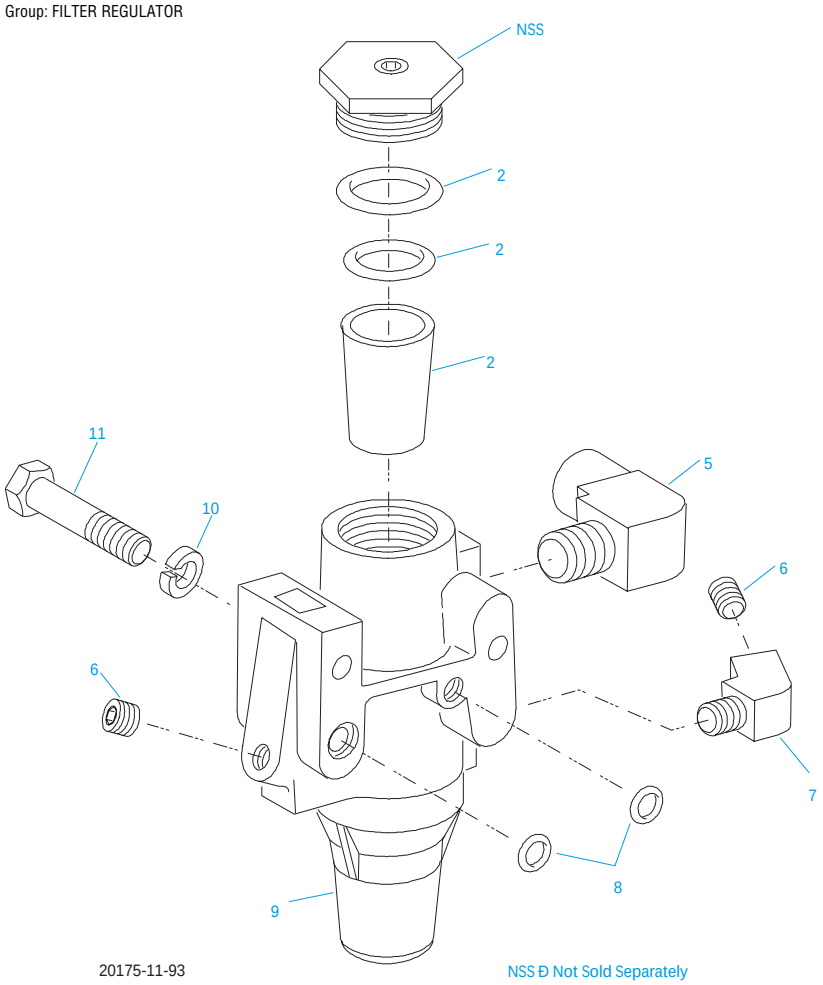

FILTER REGULATOR

Item	Current Part	Description	Replaced Part	Qty.	Notes	Kits/Assys Where Needed
2	K-1698	-O- RING/ELEMENT KIT		1	FOR FILTER REGULATOR	
5	23607	ELBOW		1		
6	X-12-208	PIPE PLUG		2	1/8" NPT	A-5587
7	12880	ELBOW		1	1/8"	
8	15114	-O- RING		2		K-2301
9	A-5373	FILTER REGULATOR ASSY	22677	1	77 - 82 PSI	K-2301
10	X-3-400	LOCKWASHER		2	1/4"	
11	X-8-440	SCREW		2	1/4"-20X2-1/4"	

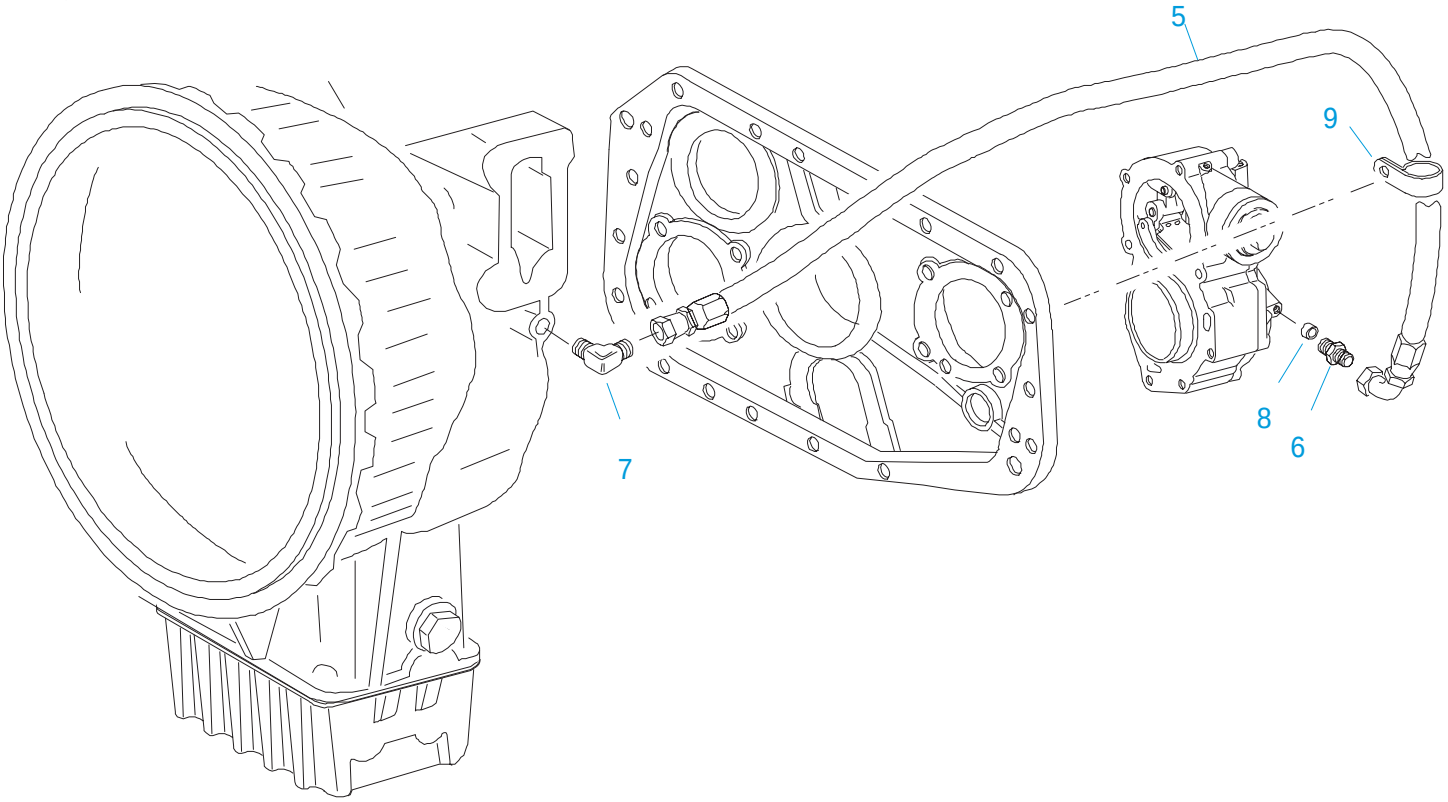

20455-11-93

FRONT SECTION MISC.

OIL LINES-POWER SYNCHRO

Item	Current Part	Description	Replaced Part	Qty.	Notes	Kits/Assys Where Needed
5	22427	HOSE ASSY		1		K-2621 ,K-2643
6	23486	CONNECTOR		1	STRAIGHT	K-2621 ,K-2642 ,K-2643
7	22424	ELBOW		1	90 DEGREE	K-2621 ,K-2642 ,K-2643 ,K-2644
8	22627	OIL RESTRICTOR		1		K-2621 ,K-2642 ,K-2643 ,K-2644
9	11665	CLAMP		1		

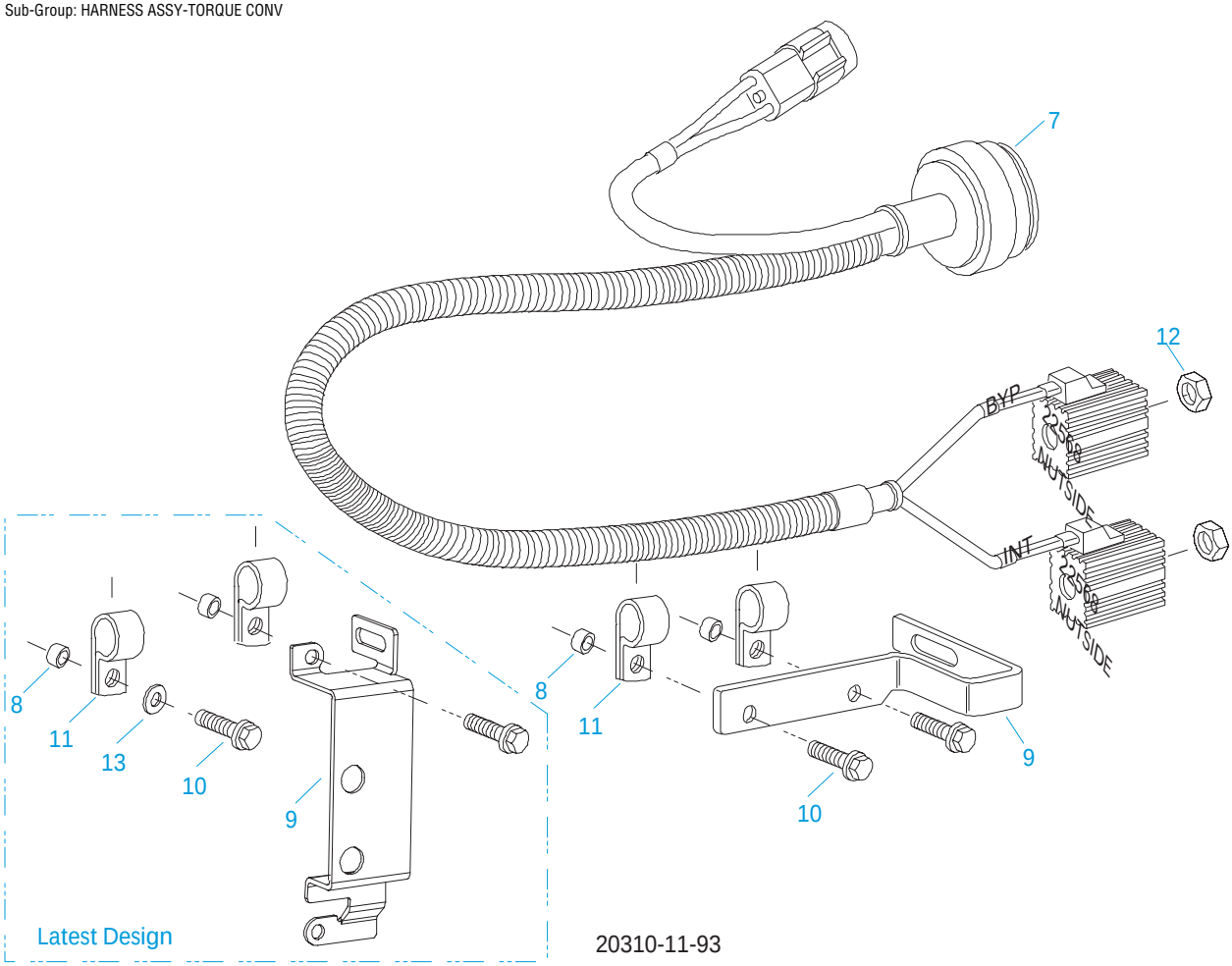

HARNESSES & HARDWARE

HARNESS ASSY-TORQUE CONV

Item	Current Part	Description	Replaced Part	Qty.	Notes	Kits/Assys Where Needed
7	A-5519	HARNESS ASSY		1		
8	4300689	SPACER		2		
9	K-3201	BRACKET KIT	4300625 ,4303346	1		
10	X-8L-681	CAPSCREW		2	3/8"-16X2-3/4"	
11	11665	CLAMP		2		
12	X-1-809	JAM NUT		2	1/2"-20	
13	X-10-605	WASHER		1	3/8"	K-2906 ,K-2980 ,K-2981 ,K-2982 ,K-2983 ,K-2983R ,K-3201
14	K-3201	BRACKET KIT	4300625 ,4303346	1		

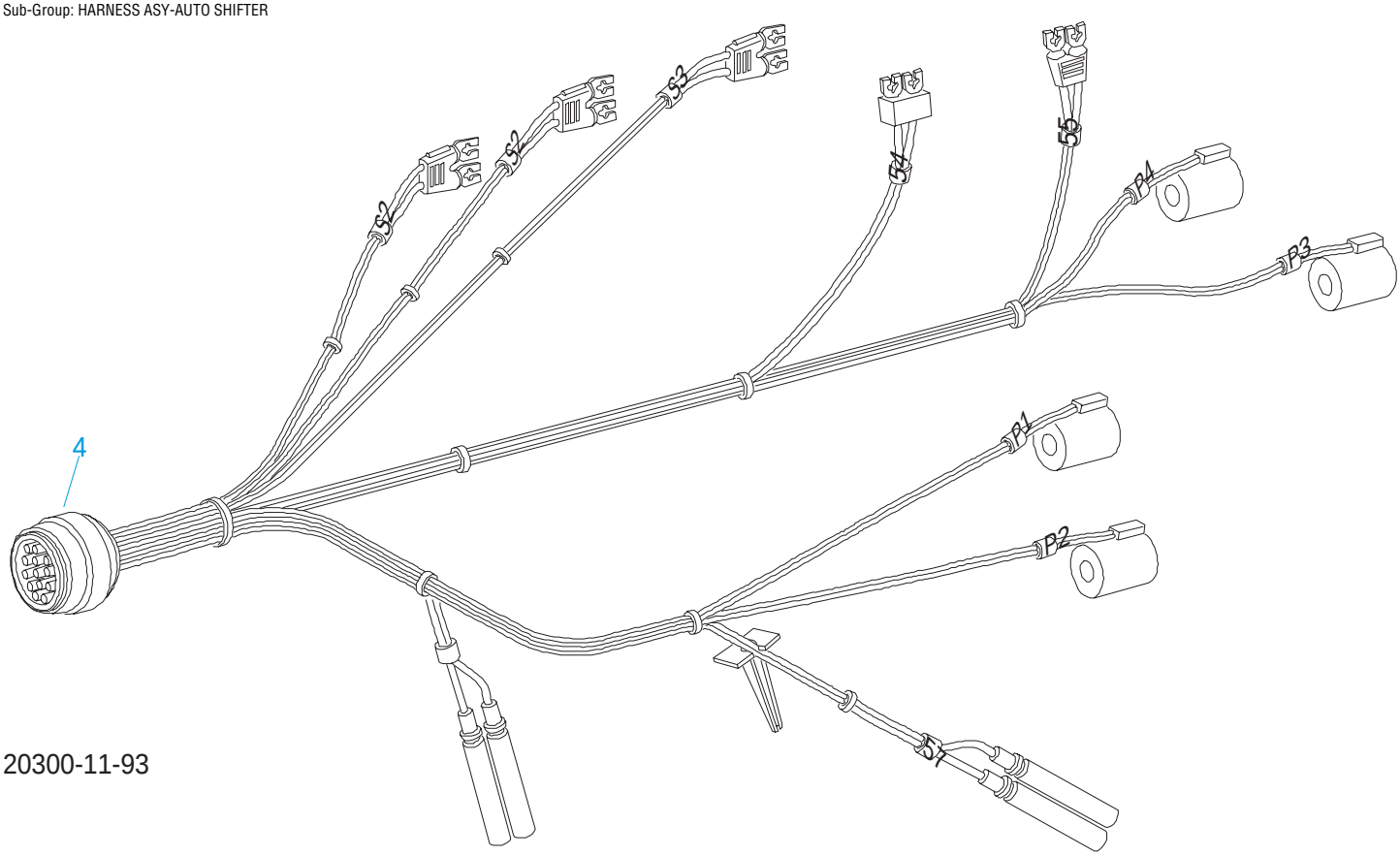

HARNESSES & HARDWARE

HARNESS ASY-AUTO SHIFTER

Item	Current Part	Description	Replaced Part	Qty.	Notes	Kits/Assys Where Needed
4	K-2981	AUTO SHIFTER KIT	A - 5518 ,K - 2384	1		

Group: INPUT SHAFT & DRIVE GEAR

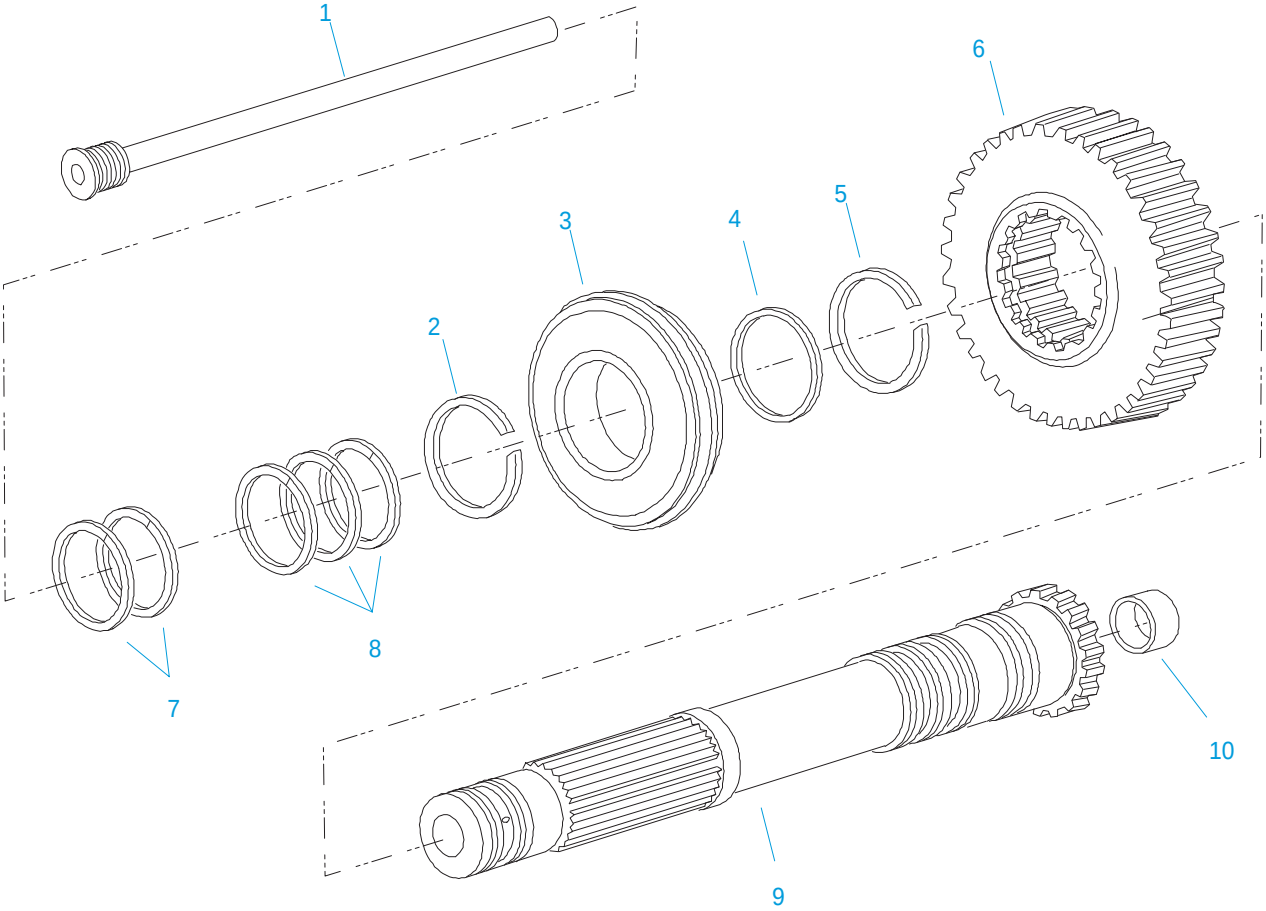

20465-11-93

INPUT SHAFT & DRIVE GEAR

Item	Current Part	Description	Replaced Part	Qty.	Notes	Kits/Assys Where Needed
1	23402	INPUT SHAFT OIL TUBE		1		S-1670
2	16980	SNAP RING		1		K-2775 ,K-2776 ,K-2777 ,K-2830
3	81504	BEARING		1		K-2289 ,K-2290 ,K-2775 ,K-2776 ,K-2777 ,K-2778
4	16463	SPACER		1		
5	14750	SNAP RING		1		K-2289 ,K-2290 ,K-2775 ,K-2776 ,K-2777 ,K-2778 ,K-2829 ,K-2830
6	19239	DRIVE GEAR	21019 ,4302458	1		
7	22428	PISTON RING		2		K-2398 ,K-2504 ,K-2990
8	23438	PISTON RING		3		K-2398 ,K-2504
9	S-1670	INPUT SHAFT ASSY	23395	1		K-2391 ,K-2775 ,K-2776 ,K-2777
10	20171	BUSHING		1		K-2289 ,K-2290 ,K-2778 ,S-1670

KITS & ASSEMBLIES

Item	Current Part	Description	Replaced Part	Qty.	Notes	Kits/Assys Where Needed
	K-2625	#1 CONVERTER HSG KIT		1		
	K-2990	16" CONV. REBUILD KIT		1		
	K-2643	6 BOLT OIL LINE KIT		1		
	K-2642	6 BOLT ROTATED LINE KIT		1		
	K-2644	8 BOLT OIL LINE KIT		1		
	K-2983	AUTO SHIFTER KIT	A - 5517 ,K - 2635	1		
	K-2981	AUTO-SHIFTER HARNESS KI	A - 5518 ,K - 2384	1		
	K-2982	AUTO-SHIFTER HARNESS KIT	K - 2396	1	24 VOLT	
	K-2385	AUTO-SHIFTER KIT		1		
	K-2633	BALL SWITCH KIT		1		
	K-2776	BASIC OVERHAUL KIT		1	ATE	
	K-2777	BASIC OVERHAUL KIT		1	ATR	
	K-2775	BASIC OVERHAUL KIT		1	AT/ATS	
	K-2289	BASIC REBUILD KIT		1	ATE	
	K-2290	BASIC REBUILD KIT		1	ATR	
	K-2778	BASIC REBUILD KIT		1	AT/ATS	
	K-2757	BRACKET KIT		1		
	S-1785	CASE ASSY	23583	1		
	S-2015	CONVERTER HOUSING ASSY		1		
	K-2388	CONVERTER HOUSING KIT	4300323 ,4300377	1		
	K-2398	CONVERTOR SEAL KIT		1		K-2390 ,K-2391 ,K-2625 ,K-2646R ,K-2647R
	K-2935	COUNTERSHAFT REPL KIT	20804 ,22411	1		
	K-2934	COUNTERSHAFT REPL KIT	19549	1		
	K-2831	CYLINDER KIT-RANGE		1		
	K-2632	ENG SPEED SENSOR KIT	22569	1		
	K-2301	FILTER REGULATOR KIT		1		
	K-2172	GASKET KIT		1		K-2289 ,K-2290 ,K-2775 ,K-2776 ,K-2777 ,K-2778
	S-1670	INPUT SHAFT ASSY	23395	1		K-2391 ,K-2775 ,K-2776 ,K-2777
	K-2391	INPUT SHAFT KIT		1		
	K-2439	KEY & WASHER KIT		1	CONTAINS 3-SIDED KEY	
	S-2688	MAINSHAFT ASSY	4303404 ,4303913	1		
	K-2634	NO LONGER AVAILABLE	4300549	1	A-RATIO	
	S-2189	NO LONGER AVAILABLE		1	B-RATIO/ATR	
	S-2187	NO LONGER AVAILABLE		1	A-RATIO/ATR	
	S-2178	NO LONGER AVAILABLE	4302015	1	ATR	
	K-2802	-O- RING KIT-RANGE		1		K-2289 ,K-2290 ,K-2775 ,K-2776 ,K-2777 ,K-2778
	K-1698	-O- RING/ELEMENT KIT		1	FOR FILTER REGULATOR	
	K-2314	OIL FILTER KIT		1		K-2990
	S-2370	OIL PAN ASSY		1	OFFSET	K-2915
	S-2369	OIL PAN COVER ASSY		1	LOW PROFILE	K-2914
	K-2915	OIL PAN RETRO KIT		1	OFFSET	
	K-2403	OIL PAN RETRO KIT		1	STANDARD	
	K-2914	OIL PAN RETRO KIT		1	LOW PROFILE	
	K-2911	OIL PUMP KIT	4300747 ,4302714	1		
	K-2504	OIL PUMP KIT		1		
	K-3651	OIL SEAL TOOL KIT		1		
	K-2262	OIL SEAL W/SLINGER	19109 20807 20808	1		K-2289 ,K-2290 ,K-2775 ,K-2776 ,K-2777 ,K-2778
	K-2621	POWER SYNCO LUBE KIT		1		
	S-2181	RANGE SECTION ASSY		1	A-RATIO/AT-ATS	
	S-2183	RANGE SECTION ASSY		1	B-RATIO/AT-ATS	
	S-2185	RANGE SECTION ASSY		1	B-RATIO/ATE	
	S-2113	REAR BRG COVER ASSY	4302027	1	AT-ATS	
	S-2119	REAR BRG COVER ASSY	20048 ,22045 ,4302009 ,4302031 ,S - 1558 S - 1560	1	ATE	

Item	Current Part	Description	Replaced Part	Qty.	Notes	Kits/Assys Where Needed
	K-2647R	REMAN 16-C CNVTR KIT	K - 3082	1		
	K-2646R	REMAN 16-D CNVTR KIT	K - 3083	1		
	K-2983R	REMAN AUTOSHIFTER KIT	K - 3080	1		
	K-2387R	REMAN HYDRA VALVE KIT	K - 2387 ,K - 3085	1		
	K-2400R	REMAN PWR SYNCHRO KIT	K - 3077	1	B-RATIO-ATR	
	K-2397R	REMAN PWR SYNCHRO KIT	K - 3076	1	A-RATIO-ATR	
	K-2392R	REMAN PWR SYNCHRO KIT	K - 3079	1	B-RATIO-AT/ATS	
	K-2781R	REMAN PWR SYNCHRO KIT	K - 3078	1	A-RATIO-AT/ATS	
	K-2630	REPL KIT-DRIVE GEAR	4300548	1	B-RATIO	
	K-2980	SENSOR UPDATE KIT	22567 ,K - 2631	1		
	K-2754	SHIFT BAR HSG ASSY	22596	1	HOUSING ONLY	
	S-1876	SHIFT BAR HSG ASSY	22596	1	COMPLETE	
	K-2829	SMALL PARTS KIT		1	ATR	
	K-2830	SMALL PARTS KIT		1	AT/ATS/ATE	
	S-1676	STATOR SUPPORT ASSY	23397	1		K-2390
	K-2390	STATOR SUPPORT KIT		1		
	K-2877	SUMP TUBE RETURN KIT	K - 2620	1		
	K-2875	THROTTLE SENSOR KIT	K - 2505	1	60" CABLE	
	K-2874	THROTTLE SENSOR KIT	K - 2325	1	45" CABLE	
	K-2876	THROTTLE SENSOR KIT	K - 2324	1	30" CABLE	

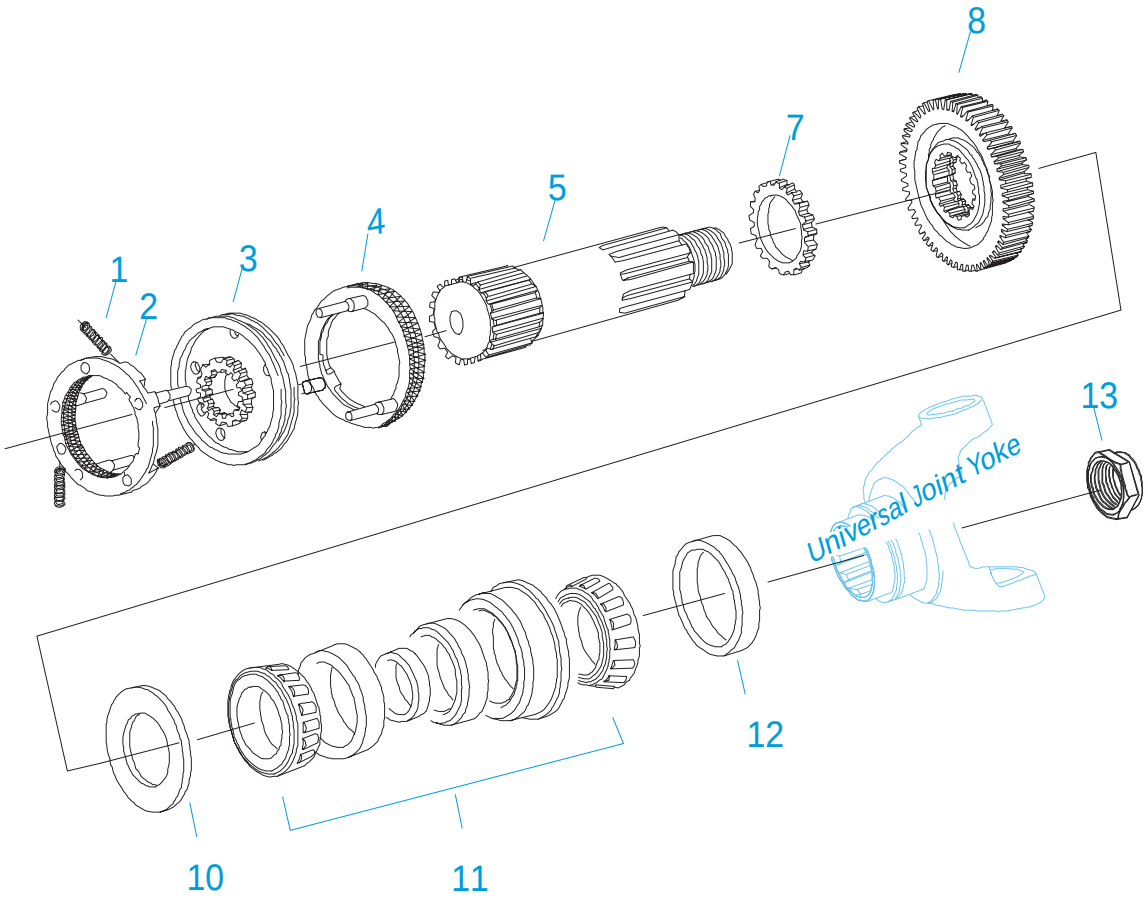

20530-11-93

MAINSHAFT & SYNCHRO(AUX)

Item	Current Part	Description	Replaced Part	Qty.	Notes	Kits/Assys Where Needed
1	14897	SPRING		3		K-2289 ,K-2290 ,K-2775 ,K-2776 ,K-2777 ,K-2778 ,K-2829 ,K-2830
2	A-7331	SYNCHRONIZER ASSY	4304396 ,4304397 ,A - 5917	1	HI RANGE	
3	22915	SLIDING CLUTCH		1		
4	A-7254	SYNCHRONIZER ASSEMBLY	A - 4937 ,A - 5876	1	LO RANGE	
5	19202	MAINSHAFT	4302460	1		
7	19203	SPACER		1		
8	23410	REDUCTION GEAR	23556	1		
10	16772	WASHER		1		K-2830
11	15260	BEARING		1		K-2289 ,K-2775 ,K-2776 ,K-2778
12	16295	SPACER		1		
13	22254	NUT	11956	1		S-2185 ,S-2189

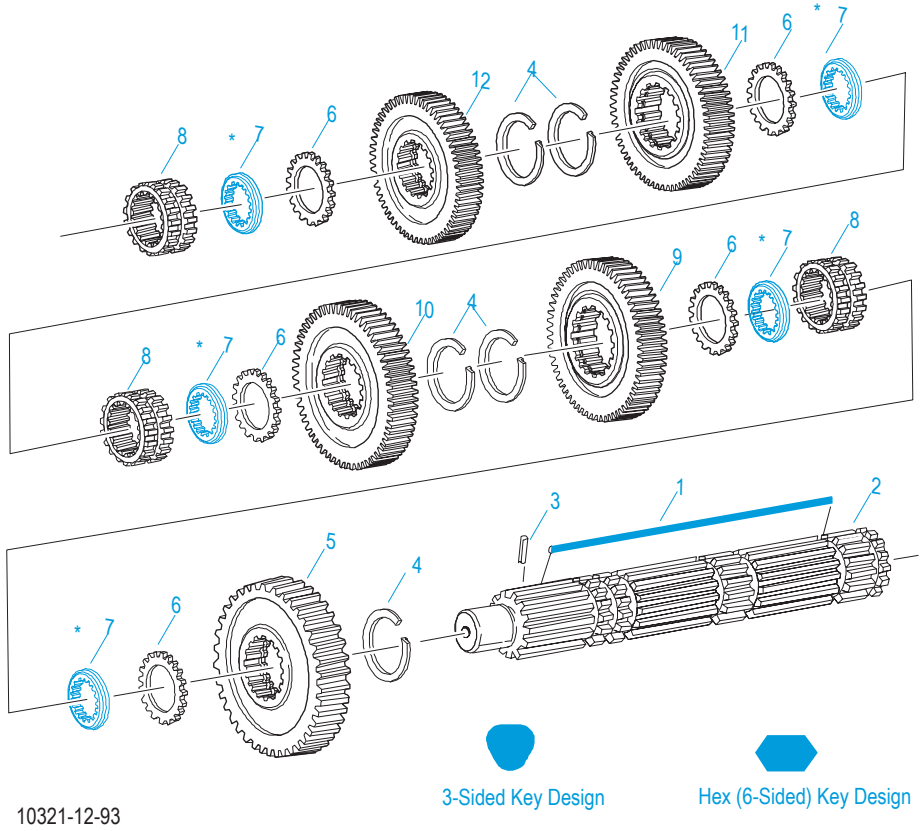

* Updating to 3-Sided Key is Recommended.
When Updating to 3-Sided Key Replace all Washers to Match Key Design
Always Use Matching Key and Washer Sets (See Appendix - Mainshaft Washers)

MAINSHAFT ASSY

Item	Current Part	Description	Replaced Part	Qty.	Notes	Kits/Assys Where Needed
1	4304615	3-SIDED KEY	4300120	1		K-2439 ,K-2830
1	K-2439	KEY & WASHER KIT		1	CONTAINS 3-SIDED KEY	
2	S-2688	MAINSHAFT ASSY	4303404 ,4303913	1		
3	62504	ROLL PIN		1		S-2688
4	14750	SNAP RING		5		K-2289 ,K-2290 ,K-2775 ,K-2776 ,K-2777 ,K-2778 ,K-2829 ,K-2830
5	16756	REVERSE GEAR-MAINSHAFT	22408	1		
6	14749	SPACER		4		K-2829 ,K-2830
7	4300830	WASHER .244-BLUE		5		K-2439 ,K-2829 ,K-2830
7	4300382	WASHER .249-WHITE		5		K-2439 ,K-2829 ,K-2830
7	4300383	WASHER .254-GREEN		5	OPTIONAL 4300382-4300387 OR 4300830 USE ANY 5 WASHERS. USE WITH 3-SIDED KEY	K-2439 ,K-2829 ,K-2830
7	4300384	WASHER .259-ORANGE		5	OPTIONAL 4300382-4300387 OR 4300830 USE ANY 5 WASHERS. USE WITH 3-SIDED KEY	K-2439 ,K-2829 ,K-2830
7	4300385	WASHER .264-PURPLE		5	OPTIONAL 4300382-4300387 OR 4300830 USE ANY 5 WASHERS. USE WITH 3-SIDED KEY	
7	4300386	WASHER .269-YELLOW		5	OPTIONAL 4300382-4300387 OR 4300830 USE ANY 5 WASHERS. USE WITH 3-SIDED KEY	
7	4300387	WASHER .274-BLACK		5	OPTIONAL 4300382-4300387 OR 4300830 USE ANY 5 WASHERS. USE WITH 3-SIDED KEY	
8	22412	SLIDING CLUTCH		3		K-2775 ,K-2776 ,K-2777

Item	Current Part	Description	Replaced Part	Qty.	Notes	Kits/Assys Where Needed
9	16754	LO GEAR-MAINSHAFT		1		
10	21024	1ST GEAR-MAINSHAFT	19628	1		
11	19622	2ND GEAR-MAINSHAFT	21263 ,4300246	1		
12	21261	OD GEAR-MAINSHAFT	19638	1		

MISCELLANEOUS

Item	Current Part	Description	Replaced Part	Qty.	Notes	Kits/Assys Where Needed
	71204	ADHESIVE SEALANT		1	0.5 CC (SINGLE APPLICATION SIZE)	
	71205	SEALANT		1	2 CC (SINGLE APPLICATION SIZE)	K-2314 ,K-2775 ,K-2776 ,K-2777 ,K-2980 ,K-2990
	4301067	SHIFT DIAGRAM LABEL		1	6 POS REVERSE FORWARD	
	4301121	SHIFT DIAGRAM LABEL		1	7 POS REVERSE REARWARD	
	4301065	SHIFT DIAGRAM LABEL		1	5 POS REVERSE FORWARD	
	4301068	SHIFT DIAGRAM LABEL		1	6 POS REVERSE REARWARD	
	4301120	SHIFT DIAGRAM LABEL		1	7 POS REVERSE FORWARD	
	4301066	SHIFT DIAGRAM LABEL		1	5 POS REVERSE REARWARD	
	71206	SILICONE LUBE		1	4 CC (SINGLE APPLICATION SIZE)	K-2314 ,K-2802 ,K-2831
	71203	SILICONE LUBE		1	8 OZ (236.59 CC)-FLEET SIZE	

Group: OIL PANS & OIL LINES
Sub-Group: OIL PAN-LOW PROFILE

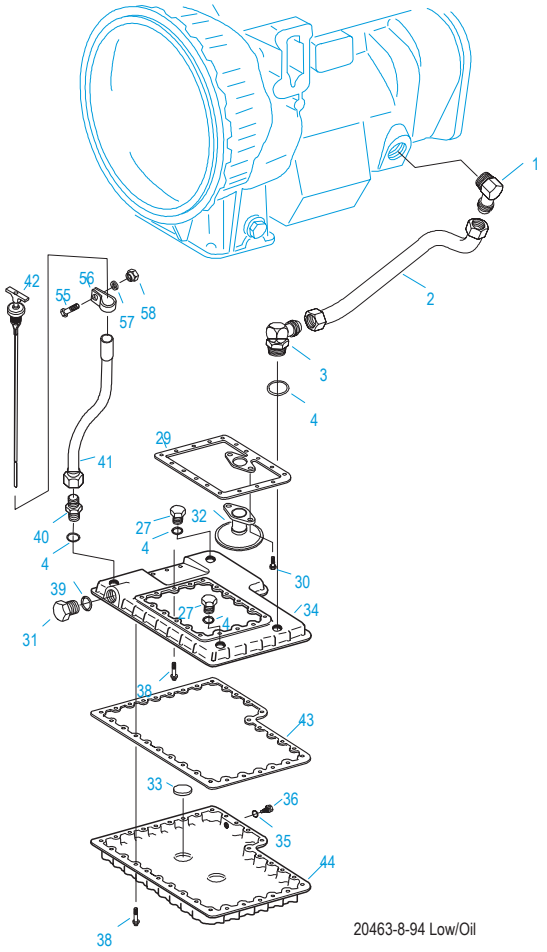

OIL PANS & OIL LINES

OIL PAN-LOW PROFILE

Item	Current Part	Description	Replaced Part	Qty.	Notes	Kits/Assys Where Needed
1	4301100	ELBOW	23597	1		K-2877
2	4302599	SUMP RETURN TUBE LH		1		K-2914
3	4302597	ELBOW 90 DEGREES		1		K-2914
4	23109	-O- RING		4		K-2388 ,K-2625 ,K-2877 ,K-2914 ,K-2915
27	22478	PLUG		2		K-2914 ,K-2915
29	22474	GASKET		1		K-2172 ,K-2314 ,K-2388 ,K-2403 ,K-2625 ,K-2914
30	X-8C-500	CAPSCREW		2	18X1-1/4"	K-2914
31	23028	PLUG		1		K-2914
32	4302596	OIL TRANSFER TUBE		1		K-2914
33	14373	MAGNET		2		S-1785
34	4302591	OIL PAN		1		K-2914
35	4300484	WASHER		1		
36	4300438	DRAIN PLUG		1		
38	X-8C-550	CAPSCREW		53	5/16"-18X1"	K-2403 ,K-2914
39	23029	-O- RING		1		K-2388 ,K-2625 ,K-2914
40	22431	CONNECTOR		1		
41	5500511	OIL FILL TUBE		1	STANDARD	
42	5501028	DIPSTICK	5501016	1	STANDARD	
43	4302595	OIL PAN GASKET		1		S-2369
44	4302593	OIL COVER		1		
55	X-8-601	CAPSCREW		1	3/8"-16X3/4"	

Item	Current Part	Description	Replaced Part	Qty.	Notes	Kits/Assys Where Needed
56	4300626	CLAMP		1		K-2874 ,K-2875 ,K-2876
57	X-10-605	WASHER		1	3/8"	K-2906 ,K-2980 ,K-2981 ,K-2982 ,K-2983 ,K-2983R ,K-3201
58	X-9-604	NUT		1	3/8"-16	

Group: OIL PANS & OIL LINES
Sub-Group: OIL PAN-LOW PROFILE/RT

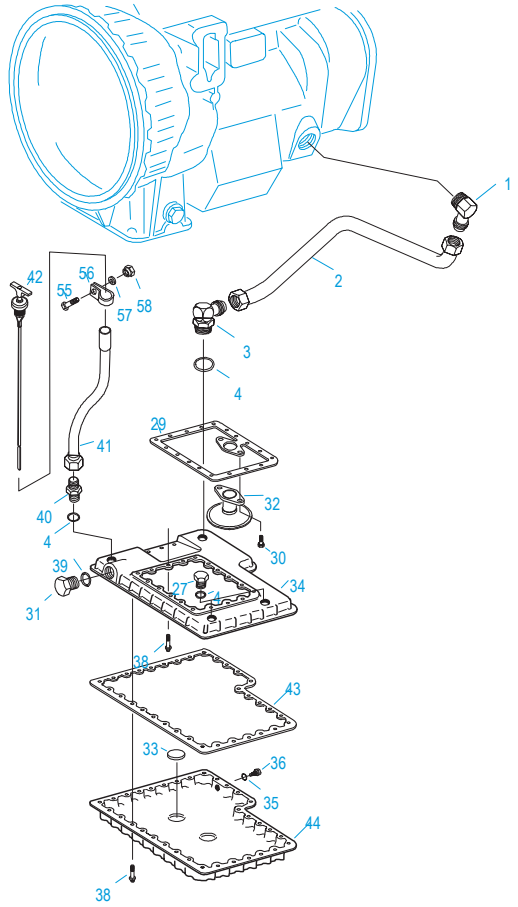

20462-8-94 Low/Rt

OIL PANS & OIL LINES

OIL PAN-LOW PROFILE/RT

Item	Current Part	Description	Replaced Part	Qty.	Notes	Kits/Assys Where Needed
1	4301100	ELBOW	23597	1		K-2877
2	4302598	SUMP RETURN TUBE RH		1		
3	22478	PLUG		1		K-2914 ,K-2915
4	23109	-O- RING		4		K-2388 ,K-2625 ,K-2877 ,K-2914 ,K-2915
27	22478	PLUG		2		K-2914 ,K-2915
29	22474	GASKET		1		K-2172 ,K-2314 ,K-2388 ,K-2403 ,K-2625 ,K-2914
30	X-8C-500	CAPSCREW		2	18X1-1/4"	K-2914
31	23028	PLUG		1		K-2914
32	4302596	OIL TRANSFER TUBE		1		K-2914
33	14373	MAGNET		2		S-1785
34	4302591	OIL PAN		1		K-2914
35	4300484	WASHER		1		
36	4300438	DRAIN PLUG		1		
38	X-8C-550	CAPSCREW		53	5/16"-18X1"	K-2403 ,K-2914
39	23029	-O- RING		1		K-2388 ,K-2625 ,K-2914
40	22431	CONNECTOR		1		
41	5500511	OIL FILL TUBE		1	STANDARD	
42	5501028	DIPSTICK	5501016	1	STANDARD	
43	4302595	OIL PAN GASKET		1		S-2369
44	4302593	OIL COVER		1		
55	X-8-601	CAPSCREW		1	3/8"-16X3/4"	

Item	Current Part	Description	Replaced Part	Qty.	Notes	Kits/Assys Where Needed
56	4300626	CLAMP		1		K-2874 ,K-2875 ,K-2876
57	X-10-605	WASHER		1	3/8"	K-2906 ,K-2980 ,K-2981 ,K-2982 ,K-2983 ,K-2983R ,K-3201
58	X-9-604	NUT		1	3/8"-16	

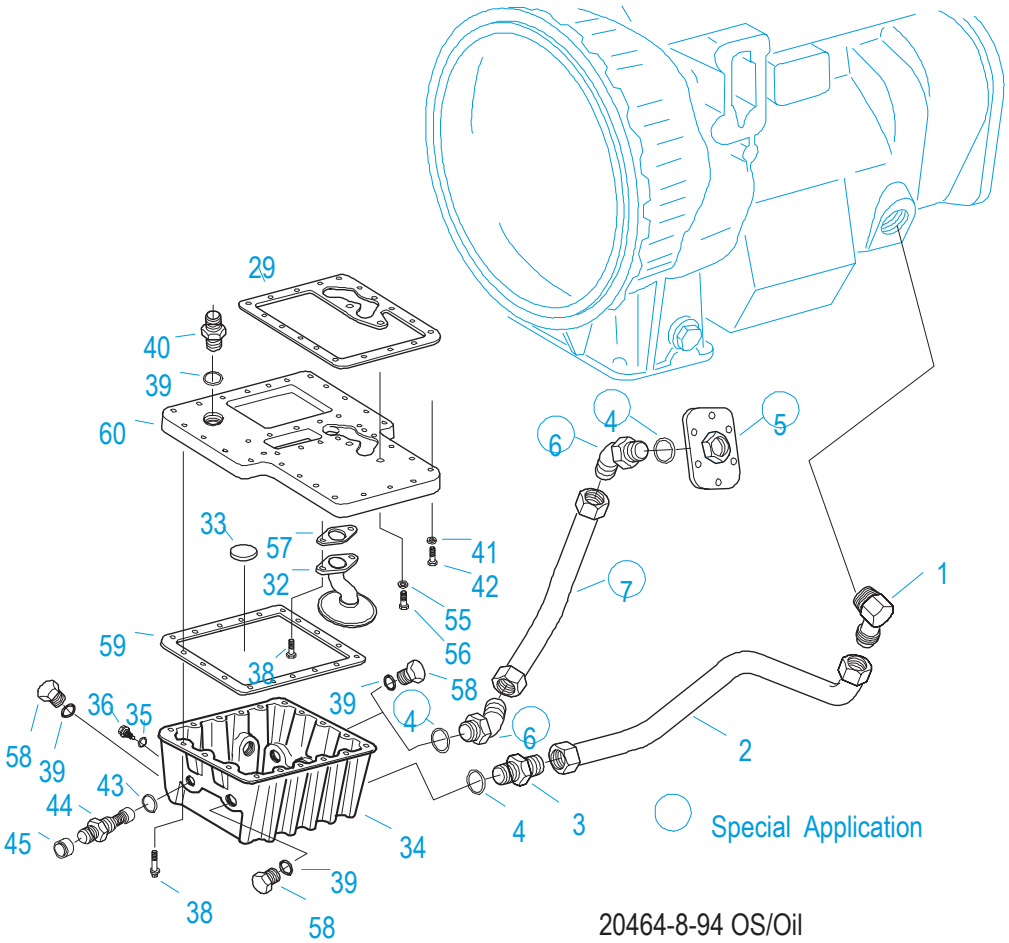

OIL PANS & OIL LINES

OIL PAN-OFFSET

Item	Current Part	Description	Replaced Part	Qty.	Notes	Kits/Assys Where Needed
1	4301100	ELBOW	23597	1		K-2877
2	4301101	TUBE	23778	1		K-2877
3	23596	CONNECTOR		1		K-2877
4	23109	-O- RING		1	QUANTITY AS REQUIRED	K-2388 ,K-2625 ,K-2877 ,K-2914 ,K-2915
5	4301113	COVER		1		
6	22413	ELBOW		2		
7	4301112	SIDE SLOPE TUBE		1		
29	4301106	GASKET		1		K-2915
32	4301601	OIL TRANSFER TUBE		1		K-2403
33	14373	MAGNET		1		S-1785
34	4301110	OIL PAN		1		
35	4300484	WASHER		1		
36	4300438	DRAIN PLUG		1		
38	X-8C-550	CAPSCREW		22	5/16"-18X1"	K-2403 ,K-2914
39	23109	-O- RING		4		K-2388 ,K-2625 ,K-2877 ,K-2914 ,K-2915
40	22431	CONNECTOR		1		
41	X-3-507	CONICAL WASHER		20	5/16"	K-2915
42	X-8L-540	CAPSCREW		20	5/16"-18X1-7/8"	
43	23029	-O- RING		1		K-2388 ,K-2625 ,K-2914
44	A-5754	VALVE ASSY		1		K-2625
45	4300452	CAP		1		
55	4301114	SEALING WASHER		2		K-2915

Item	Current Part	Description	Replaced Part	Qty.	Notes	Kits/Assys Where Needed
56	X-8L-540	CAPSCREW		2	5/16"-18X1-7/8"	
57	4301109	GASKET		1		K-2915
58	22478	PLUG		3		K-2914 ,K-2915
59	4301108	GASKET		1		S-2370
60	4301107	ADAPTER		1		K-2915

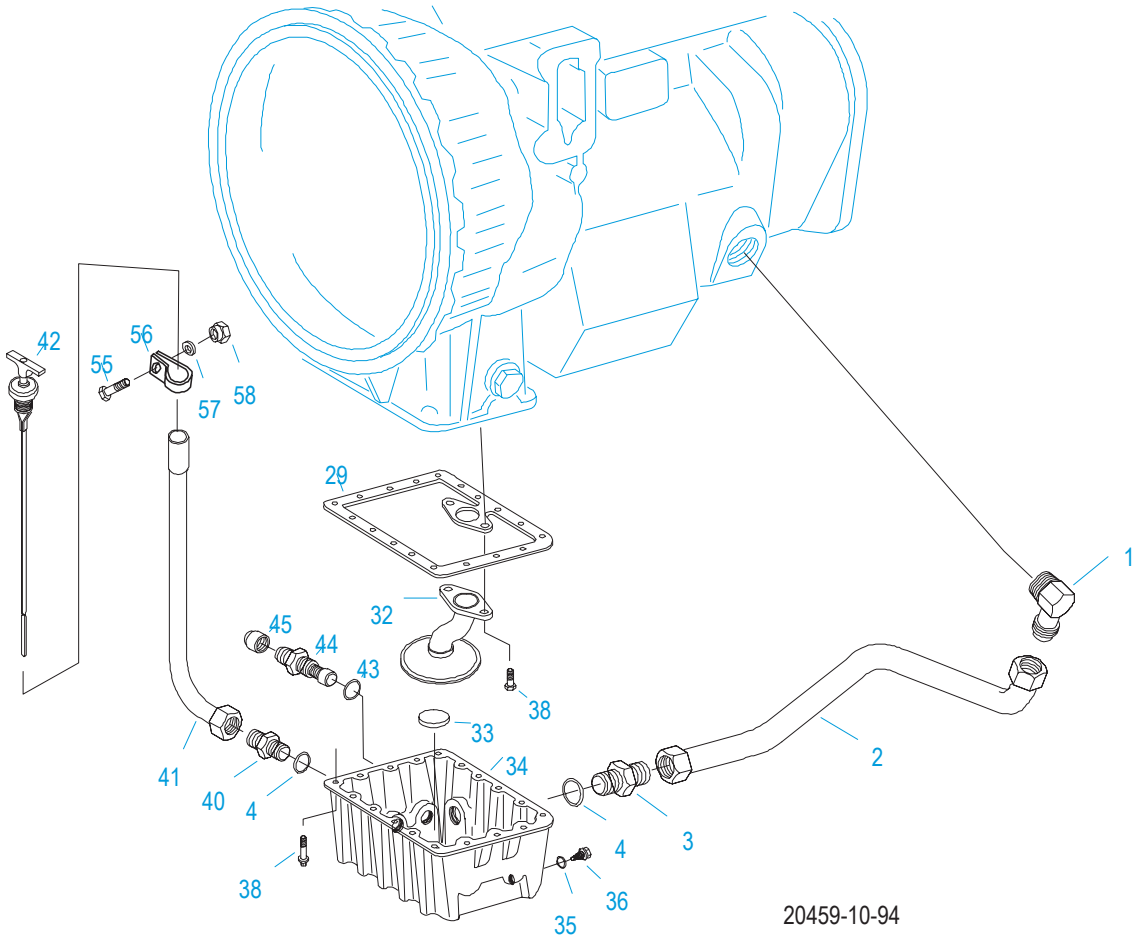

OIL PANS & OIL LINES

OIL PAN-STANDARD

Item	Current Part	Description	Replaced Part	Qty.	Notes	Kits/Assys Where Needed
1	4301100	ELBOW	23597	1		K-2877
2	4301101	TUBE	23778	1		K-2877
3	23596	CONNECTOR		1		K-2877
4	23109	-O- RING		2		K-2388 ,K-2625 ,K-2877 ,K-2914 ,K-2915
29	22474	GASKET		1		K-2172 ,K-2314 ,K-2388 ,K-2403 ,K-2625 ,K-2914
32	4301601	OIL TRANSFER TUBE		1		K-2403
33	14373	MAGNET		1		S-1785
34	4300432	OIL PAN		1		
35	4300484	WASHER		1		
36	4300438	DRAIN PLUG		1		
38	X-8C-550	CAPSCREW		22	5/16"-18X1"	K-2403 ,K-2914
40	22431	CONNECTOR		1		
41	5500503	OIL FILL TUBE		1	STANDARD	
42	5501021	DIPSTICK	5501004	1	STANDARD	
43	23029	-O- RING		1		K-2388 ,K-2625 ,K-2914
44	A-5754	VALVE ASSY		1		K-2625
45	4300452	CAP		1		
55	X-8-601	CAPSCREW		1	3/8"-16X3/4"	
56	4300626	CLAMP		1		K-2874 ,K-2875 ,K-2876
57	X-10-605	WASHER		1	3/8"	K-2906 ,K-2980 ,K-2981 ,K-2982 ,K-2983 ,K-

Item	Current Part	Description	Replaced Part	Qty.	Notes	Kits/Assys Where Needed
58	X-9-604	NUT		1	3/8"-16	2983R ,K-3201

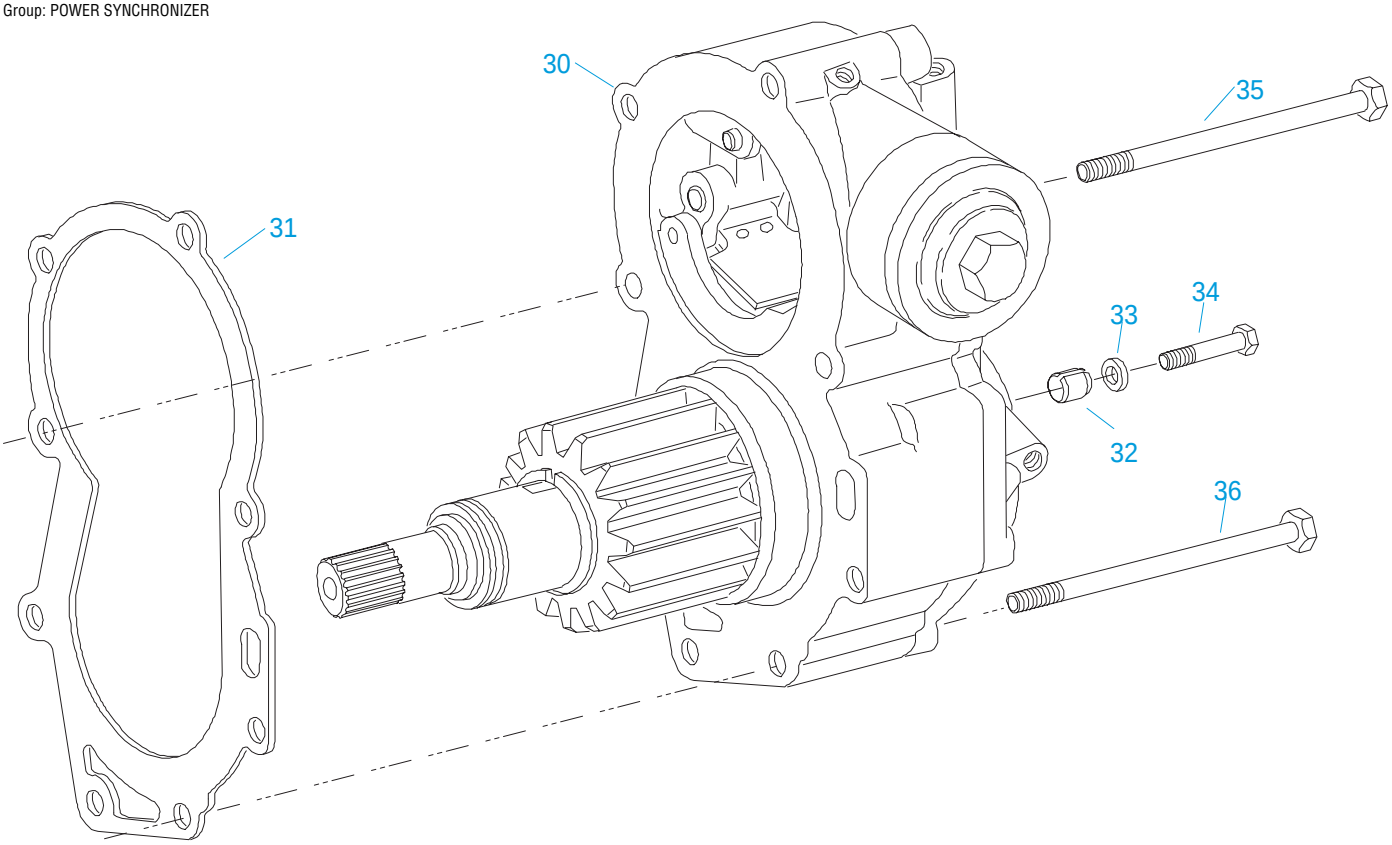

20541-11-93

POWER SYNCHRONIZER

Item	Current Part	Description	Replaced Part	Qty.	Notes	Kits/Assys Where Needed
30	K-2392R	REMAN PWR SYNCHRO KIT	K - 3079	1		
31	22607	GASKET		1		K-2172 ,K-2392R ,K-2397R ,K-2400R ,K-2781R
32	62525	ROLL PIN		2		
33	X-10-401	WASHER		2	9/32"	
34	X-8-413	CAPSCREW		2	1/4"-20X1-1/2"	
35	X-8L-636	CAPSCREW		7	3/8"-16X3-3/4"	
36	X-8L-621	CAPSCREW		1	3/8"-16X5"	

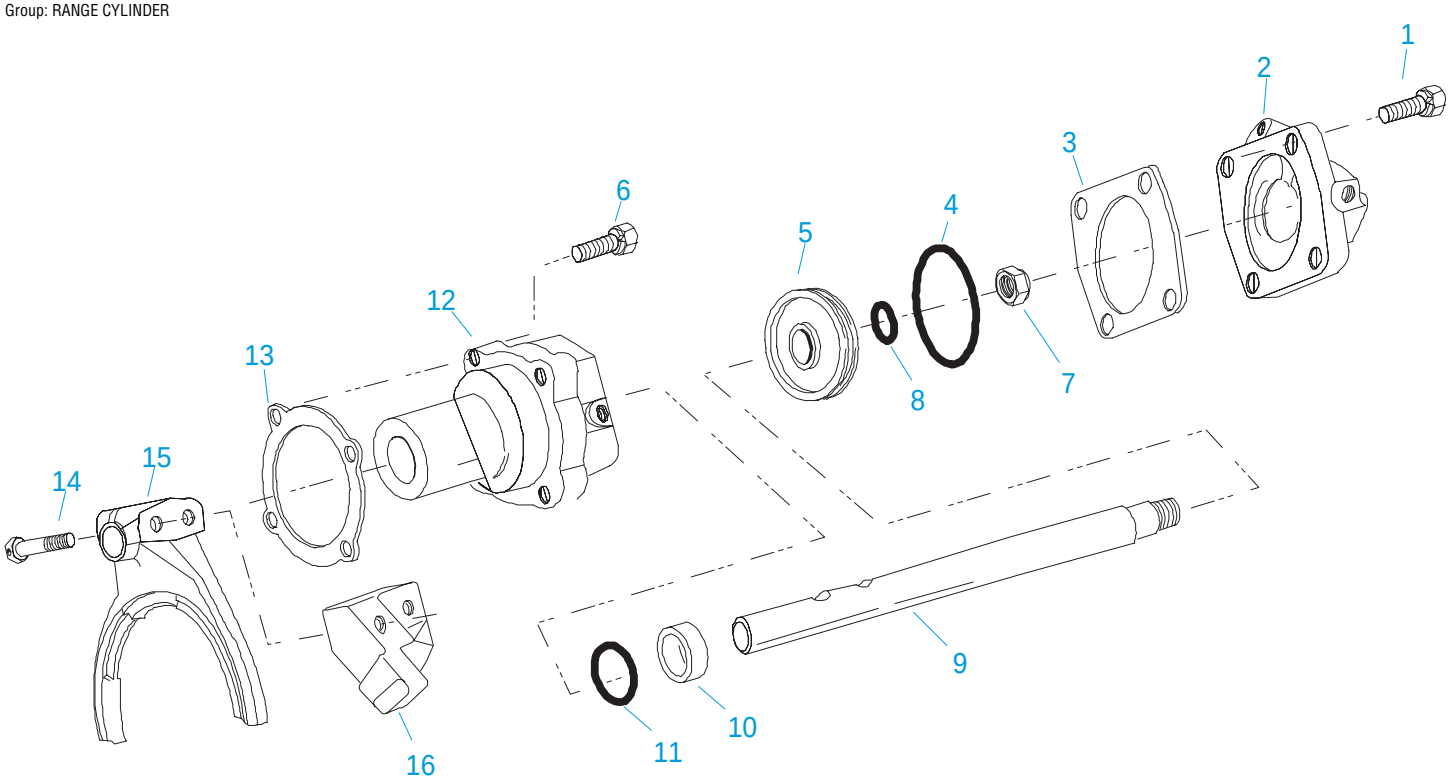

20536-11-93

RANGE CYLINDER

Item	Current Part	Description	Replaced Part	Qty.	Notes	Kits/Assys Where Needed
1	X-8L-604	CAPSCREW		4	3/8"-16X1-1/4"	
2	19690	CYLINDER COVER		1		
3	14349	GASKET		1		K-2172 ,K-2802 ,K-2831
4	14344	-O- RING		1		K-2802 ,K-2831
5	14341	PISTON	23353	1		K-2831
6	X-8L-604	CAPSCREW		4	3/8"-16X1-1/4"	
7	X-1-1010	NUT		1	5/8"-18	K-2802 ,K-2831
8	14345	-O- RING		1		K-2802 ,K-2831
9	19652	YOKE BAR		1		
10	22542	BUSHING		1		A-5371
11	14765	-O- RING		1		K-2802 ,K-2831
12	A-5371	RANGE CYLINDER ASSY	22543	1		K-2831
13	14347	GASKET		1		K-2172 ,K-2802 ,K-2831
14	X-8-825	CAPSCREW		2	1/2"-13X2-3/8"	
15	4301642	SHIFT YOKE		1		
16	23408	BRACKET		1		

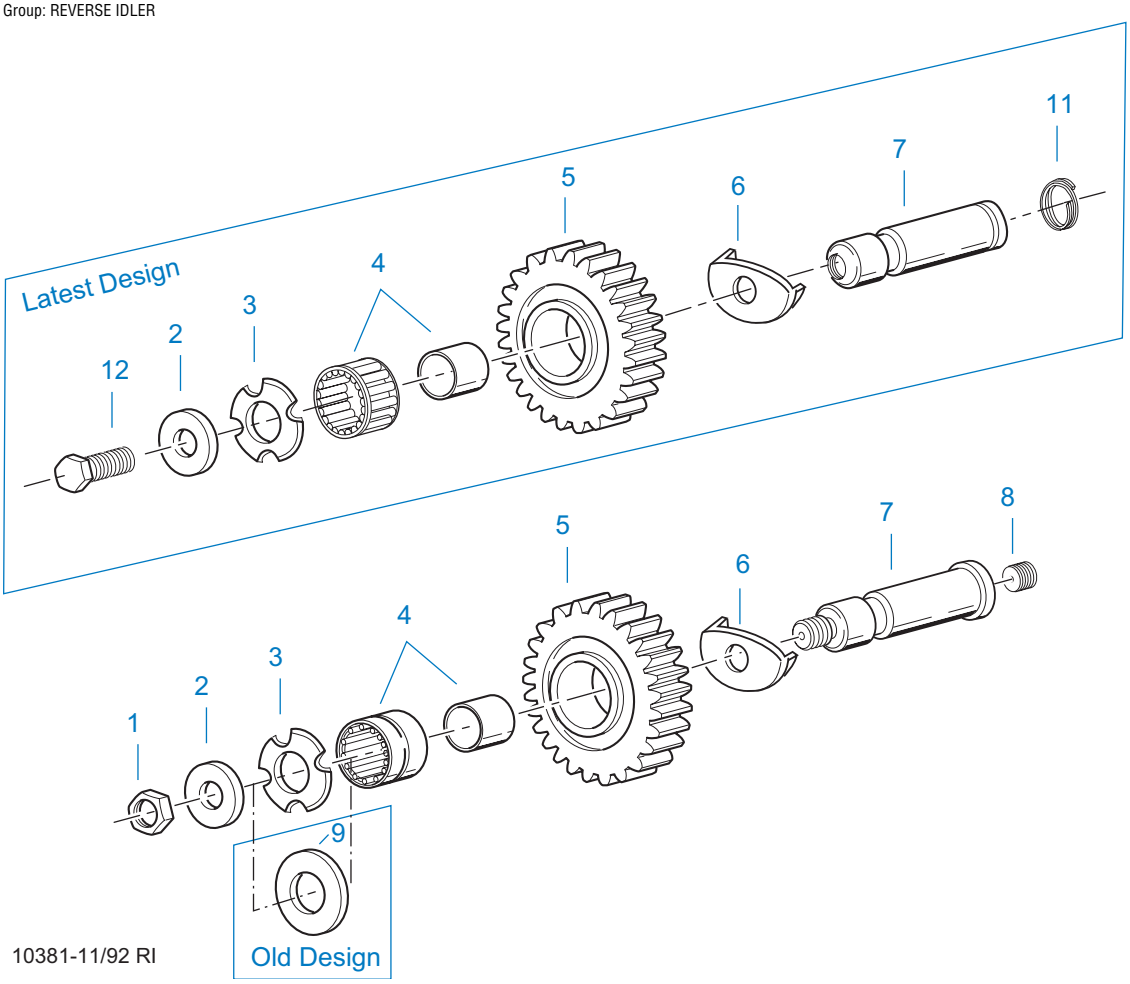

REVERSE IDLER

Item	Current Part	Description	Replaced Part	Qty.	Notes	Kits/Assys Where Needed
1	X-1-1008	NUT		2	5/8"-18	
2	14283	IDLER PLATE		2		K-3217
3	4302982	WASHER	14282	2		K-3217 ,S-1412
4	14287	BEARING	4305020	2		K-1866 ,K-1980
5	16757	REVERSE IDLER GEAR	22409	2		
6	16403	WASHER		2		K-3217
7	K-3217	IDLER SHAFT REPL KIT	4302981	2		
8	5202	PLUG		2		
9	14282	NO LONGER AVAILABLE		2		
11	4303336	RETAINING RING		2		K-3217
12	X-7-1008	CAPSCREW		2	5/8"-18X1-1/4	K-3217

Group: STATOR SUPPORT ASSY

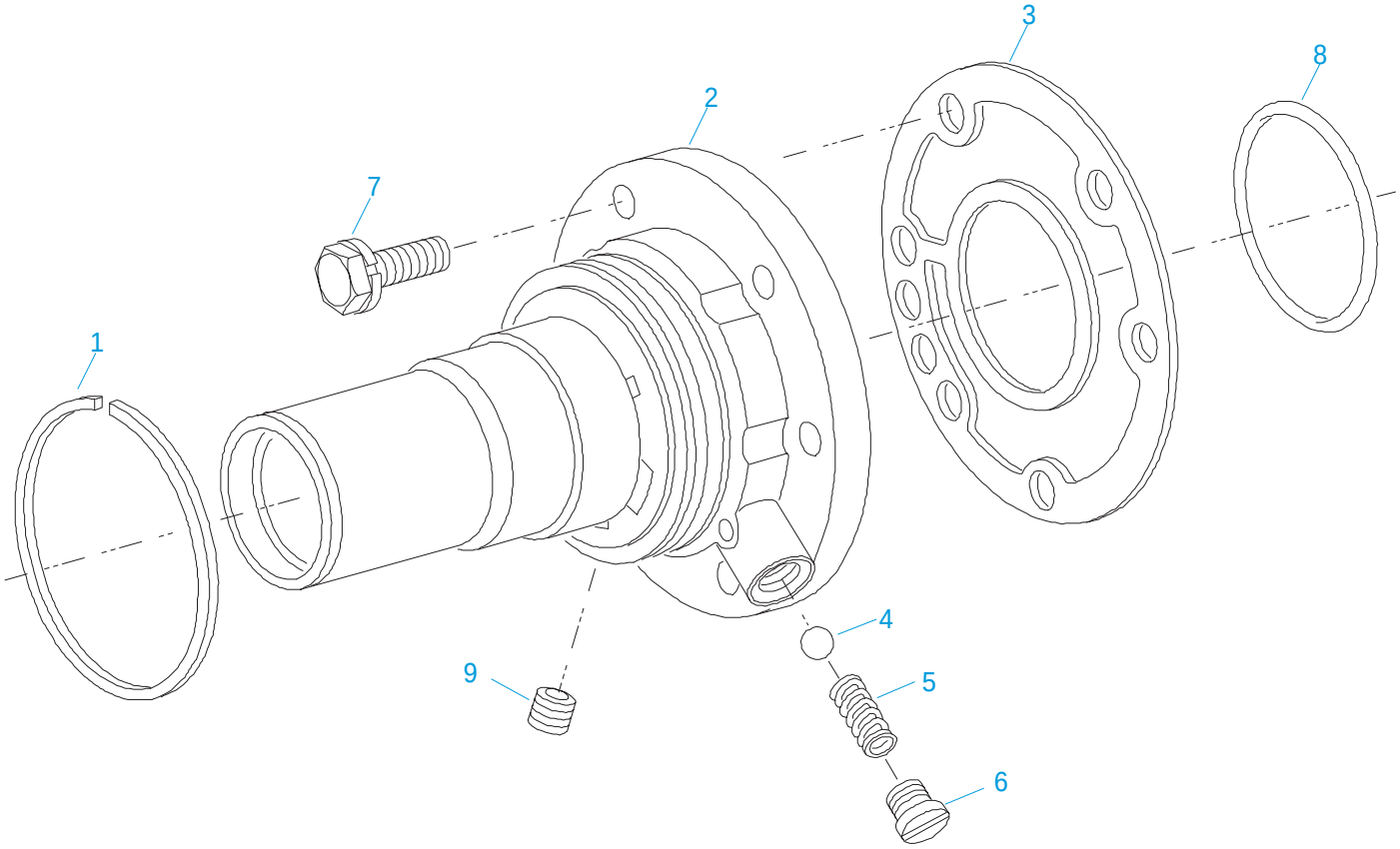

20421-11-93

STATOR SUPPORT ASSY

Item	Current Part	Description	Replaced Part	Qty.	Notes	Kits/Assys Where Needed
1	22496	SEAL RING		1		K-2398 ,K-2504
2	S-1676	STATOR SUPPORT ASSY	23397	1		K-2390
3	23398	GASKET		1		K-2172 ,K-2391 ,K-2504 ,K-2625 ,S-1676
4	X-14-700	STEEL BALL		1	7/16"	
5	22464	SPRING		1		
6	23616	PLUG		1		
7	X-8L-616	CAPSCREW		6	3/8"-16X2-3/4"	
8	23401	-O- RING		1		K-2391
9	X-12-208	PIPE PLUG		1	1/8" NPT	A-5587

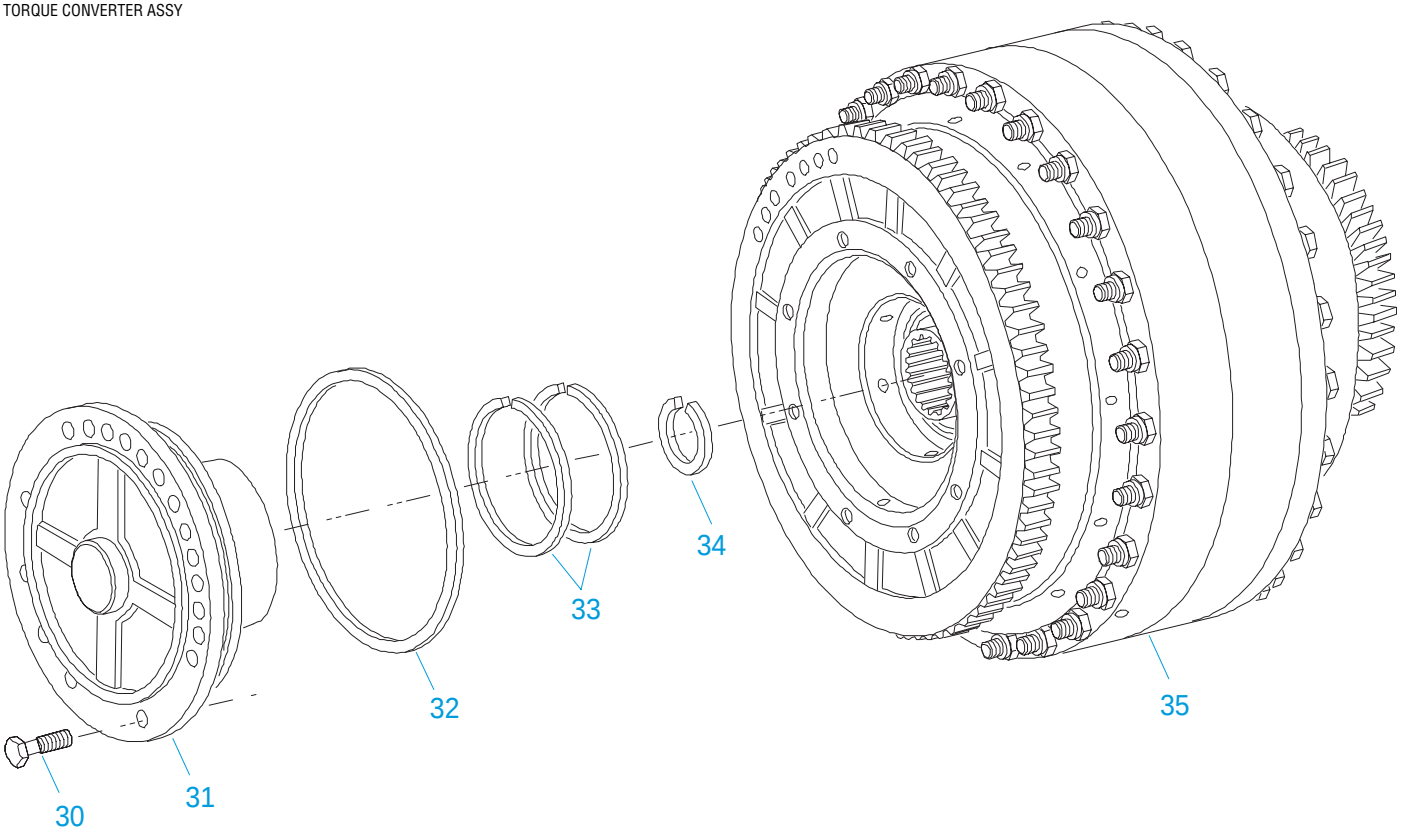

20430-11-93

TORQUE CONVERTER ASSY

Item	Current Part	Description	Replaced Part	Qty.	Notes	Kits/Assys Where Needed
30	X-8-645	CAPSCREW		8	3/8"-16X1"	
31	4301426	PILOT		1		
32	22463	-O- RING		1		K-2398 ,K-2504
33	22497	SEAL RING		2		K-2398 ,K-2504
34	22429	SNAP RING		1		K-2398
35	K-2647R	REMAN 16-C CNVTR KIT	K - 3082	1		
35	K-2646R	REMAN 16-D CNVTR KIT	K - 3083	1		

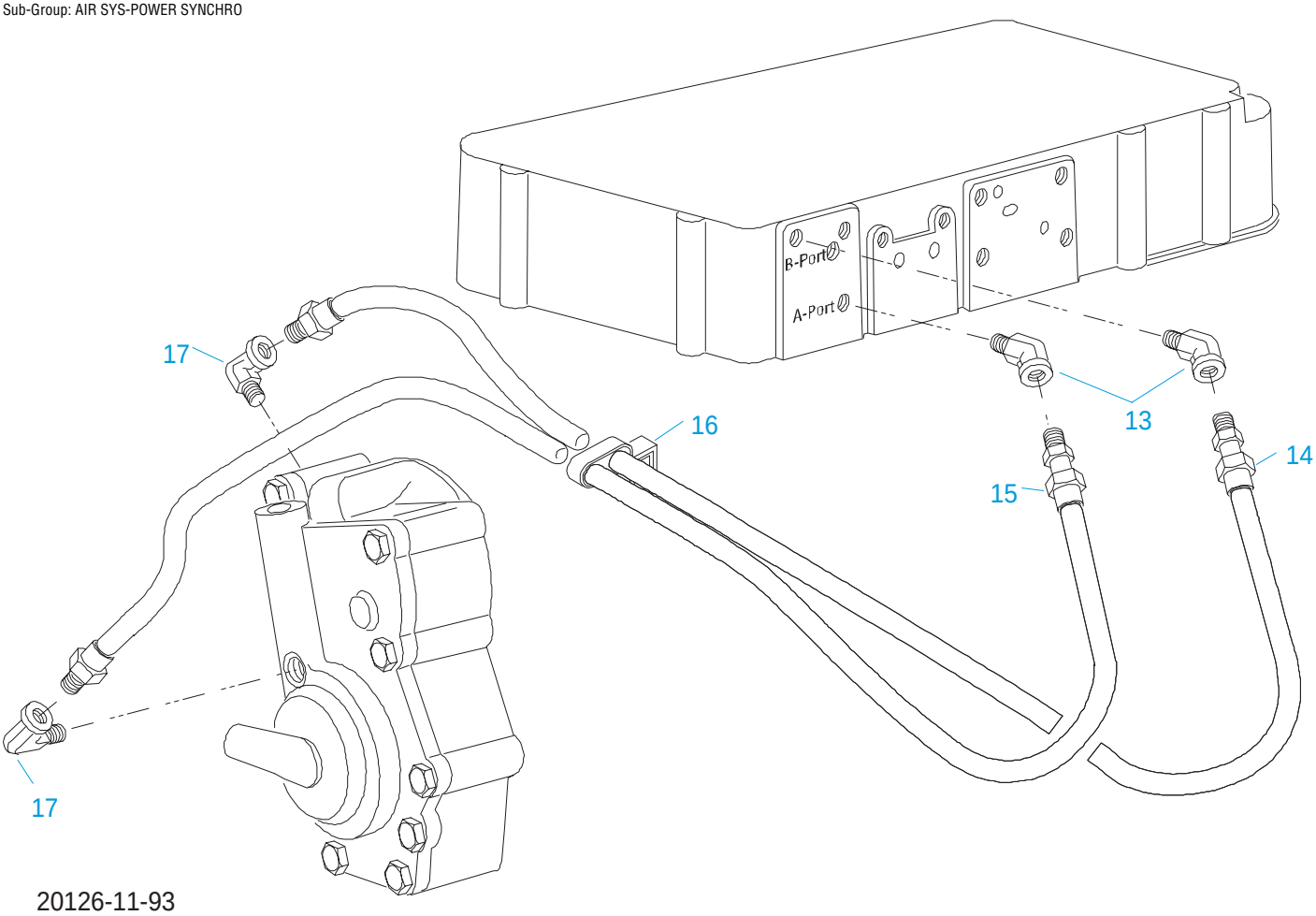

VALVES

AIR SYS-POWER SYNCHRO

Item	Current Part	Description	Replaced Part	Qty.	Notes	Kits/Assys Where Needed
13	12880	ELBOW		2	1/8"	
14	55524	HOSE ASSY		1	27"	
15	55534	HOSE ASSY		1	29-1/2"	
16	18769	HOSE CLAMP		1		
17	12845	ELBOW		2	1/8"	

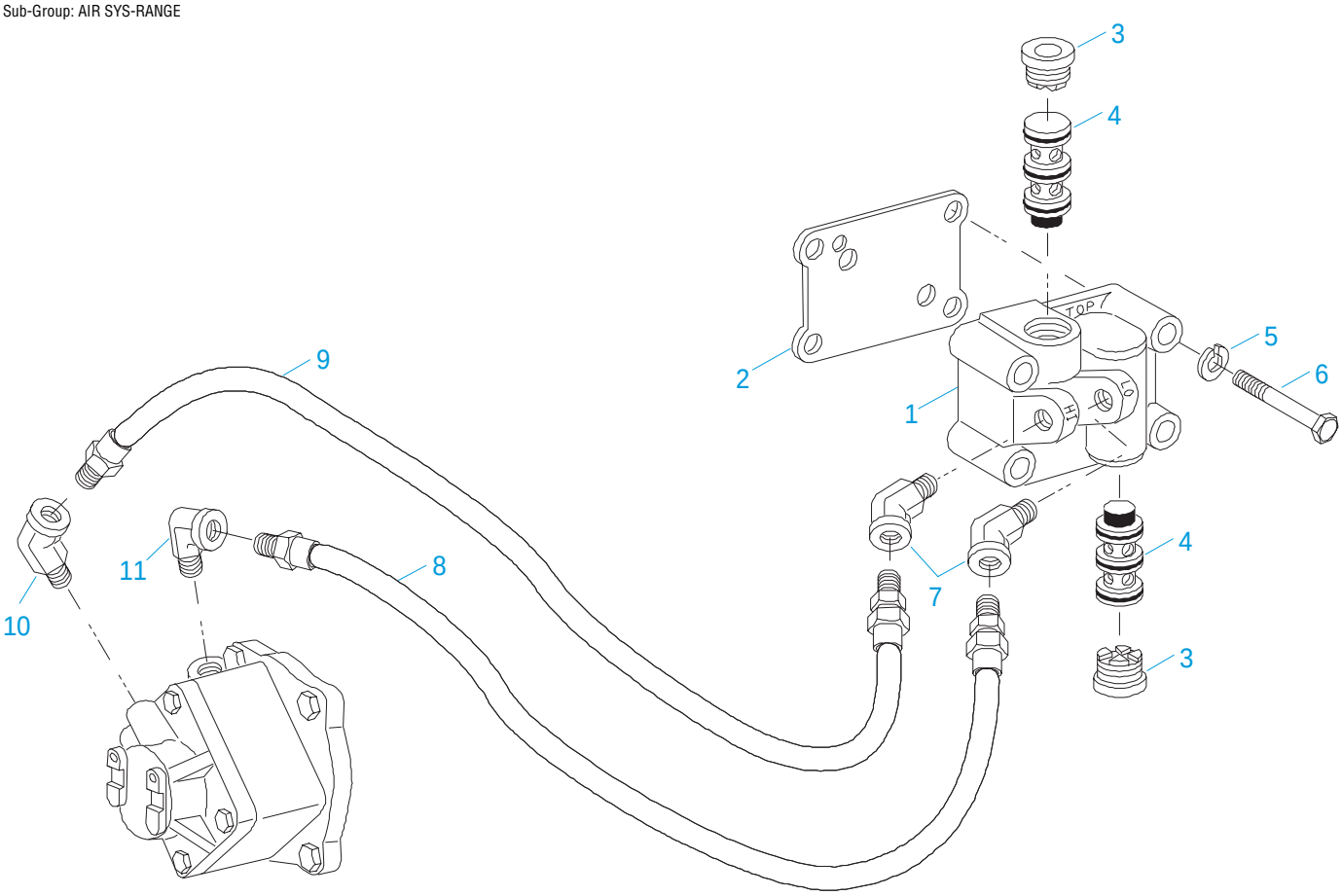

20100-11-93

VALVES

AIR SYS-RANGE

Item	Current Part	Description	Replaced Part	Qty.	Notes	Kits/Assys Where Needed
1	K-2979	RANGE VALVE KIT	A - 5363	1		
2	22551	GASKET		1		K-2172 ,K-2979
3	22639	PLUG		2		
4	4300810	INSERT VALVE	22641 ,4303615	2		
5	X-3-500	LOCKWASHER		4	5/16"	
6	X-8-546	SCREW		4	5/16"-18X2"	
7	12880	ELBOW		2	1/8"	
8	55525	HOSE ASSY		1	17"	
9	55506	HOSE ASSY		1	18"	
10	12880	ELBOW		1	1/8"	
11	12845	ELBOW		1	1/8"	

Appendix

Air Line Tubing

Choosing nylon tubing for air lines

Use the following chart to specify the Eaton® Fuller® nylon tube appropriate to your vehicle's air system.

5/32" Air Line and Harness Combinations			
Line Type	**Line Color**	**Order Part No#**	**Length**
Supply + Port	Red (S) + Black (P)	52601	50 ft
Splitter + Deep Reduction	Blue (SP) + Green (H/L)	52701	50 ft
Supply + Splitter + Port	Red(S)+Blue(SP)+ Black(P)	74601	50 ft

5/32" Air Lines			
Line Type	**Line Color**	**Order Part No#**	**Length**
Supply	Red (S)	75120	50 ft
Port	Black (P)	75320	50 ft
Splitter	Blue (SP)	75720	50 ft
Deep Reduction	Green (H/L)	75520	50 ft
Sheathing		80120	50 ft

1/8" Air Lines			
Line Type	**Line Color**	**Order Part No#**	**Length**
Supply	White	68526	50 ft
Port	Black	82013	50 ft
Sheathing		80000	50 ft

10650-1/92 AL Chart

Identifying fittings

Fittings are available in 5/32" and 1/8" sizes as appropriate for vehicle air line sizes. 5/32" fittings are available as 'push to connect' or compression fittings. 1/8" fittings are available as compression fittings.

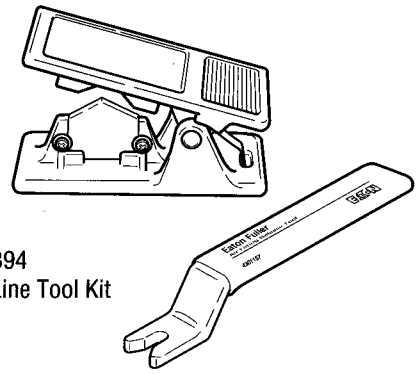

K-2394
Air Line Tool Kit

5/32" 'Push–to–Connect' Fittings

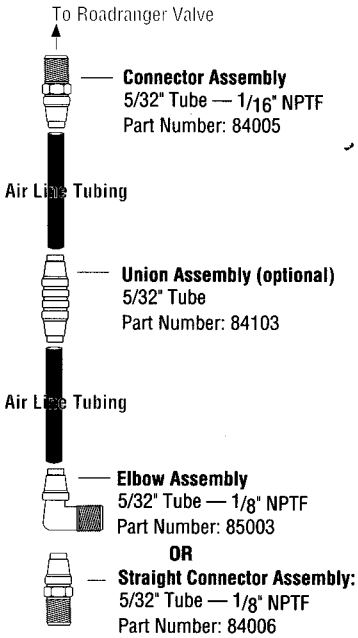

5/32" Compression Fittings

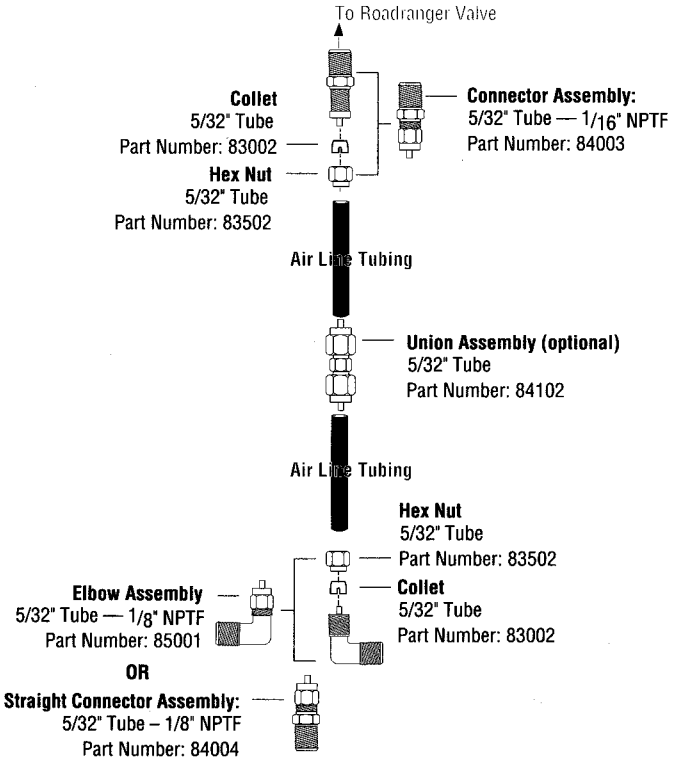

1/8" Compression Fittings

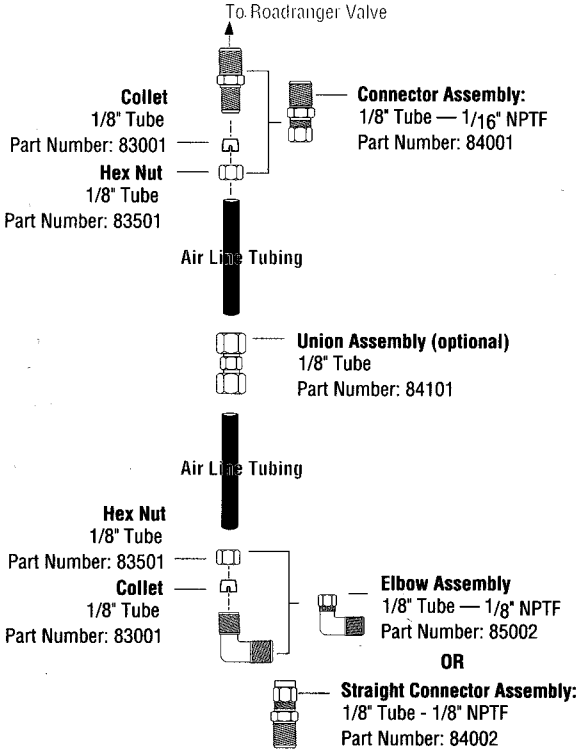

10656-10/92 Fittings RRV

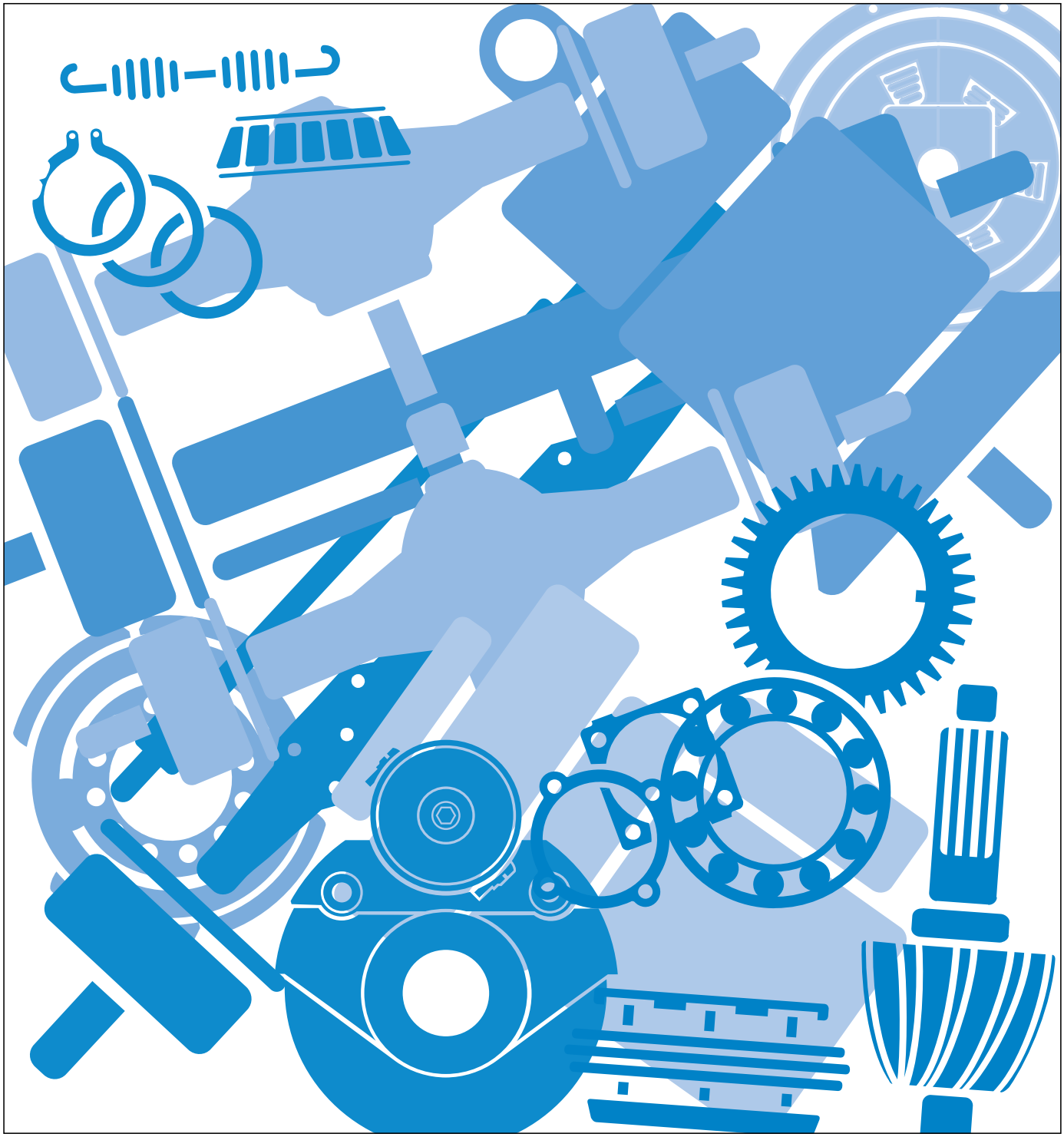

Copyright Eaton and Dana Corporation, 2002. EATON AND DANA CORPORATION hereby grants its customers, vendors, or distributors permission to freely copy, reproduce and/or distribute this document in printed format. THIS INFORMATION IS NOT INTENDED FOR SALE OR RE-SALE, AND THIS NOTICE MUST REMAIN ON ALL COPIES.

National Institute for AUTOMOTIVE SERVICE EXCELLENCE

Roadranger
MORE TIME ON THE ROAD

The Roadranger® System is an unbeatable combination of the best products from Eaton and Dana – partnering to provide you the most advanced, most trouble-free drivetrain in the industry. And it's backed by the Roadrangers – the most experienced, most expert, most accessible drivetrain consultants in the business.

For spec'ing or service assistance, call 1-800-826-HELP (4357) 24 hours a day, 7 days a week, (Mexico: 001-800-826-HELP (4357)) for more time on the road. Or visit our web site at www.roadranger.com.

DANA | EATON

One Great Drivetrain from Two Great Companies

RTO-11109B-ATS
6/05
Printed in the USA